OPERA
OPERATING ACCESS

ITEM 55010

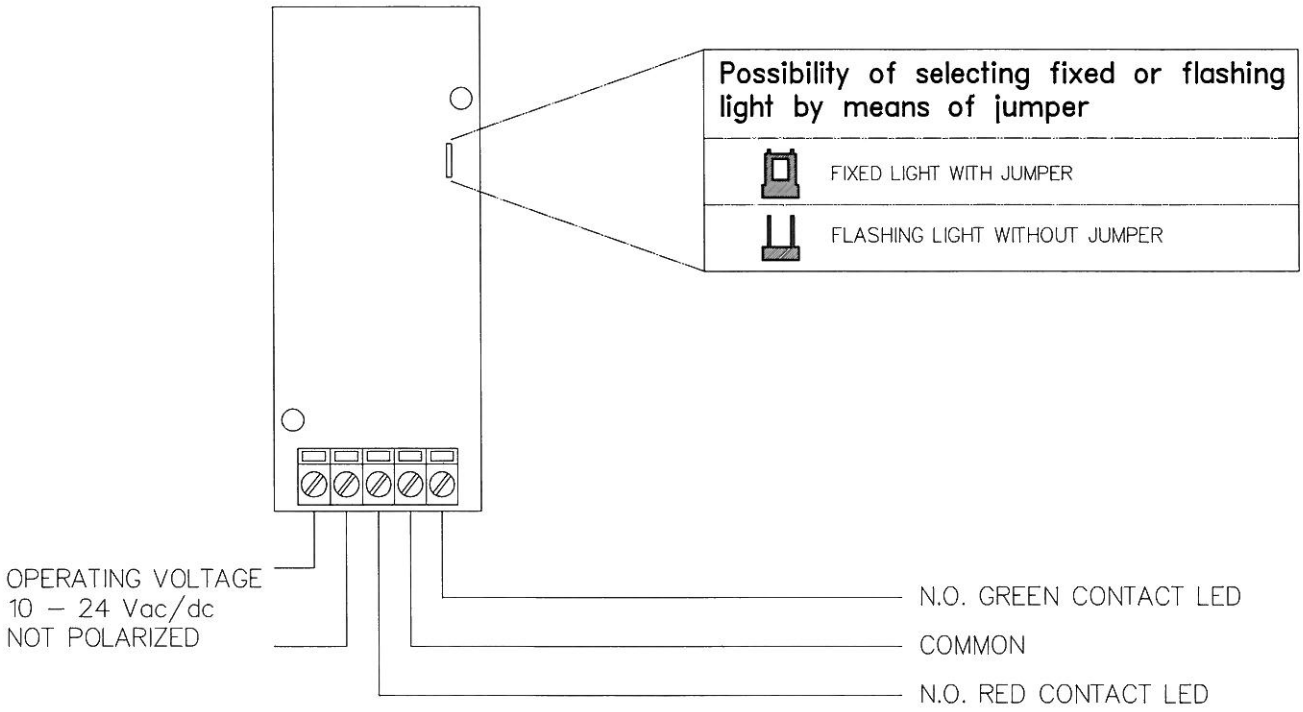

FRONT PLATE DIMENSION DEPTH INTERNAL SIZE

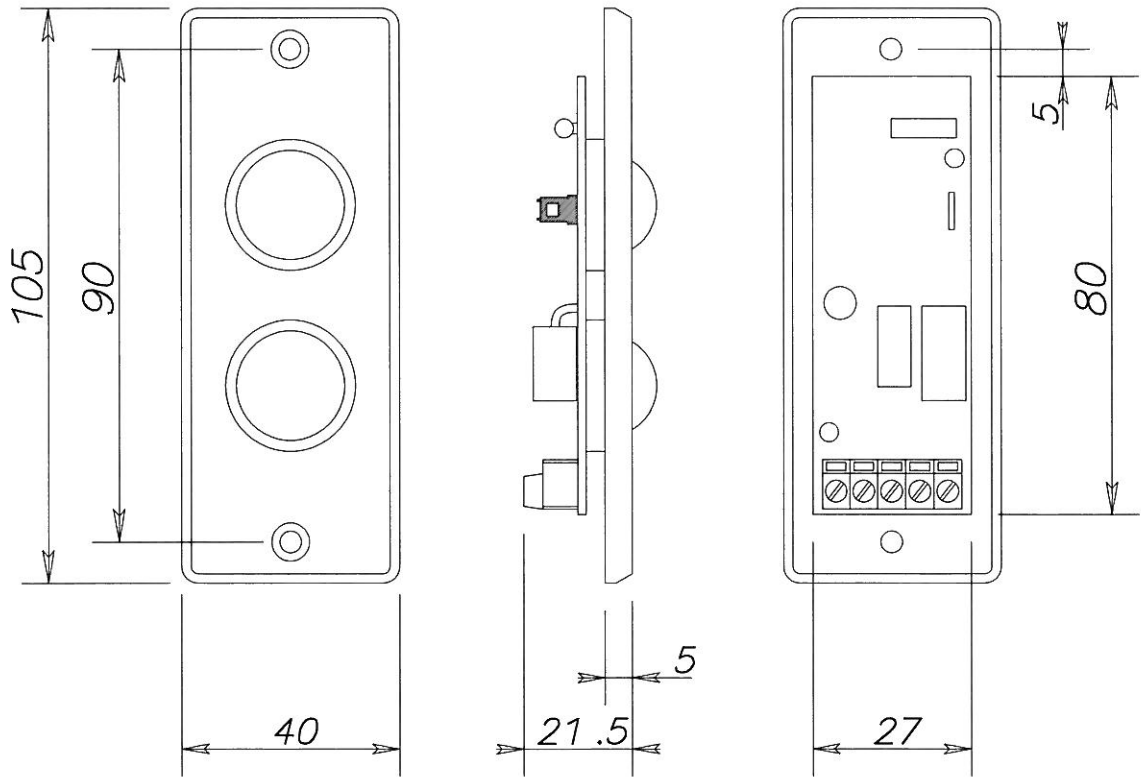

OPERA s.r.l. – Via Somalia, 15/17 – 41122 Modena – Italy
Tel +39 059 451708 – Fax +39 059 451697
www.opera-italy.com

9804/216