PRICE LIST 24

Welcome in Security

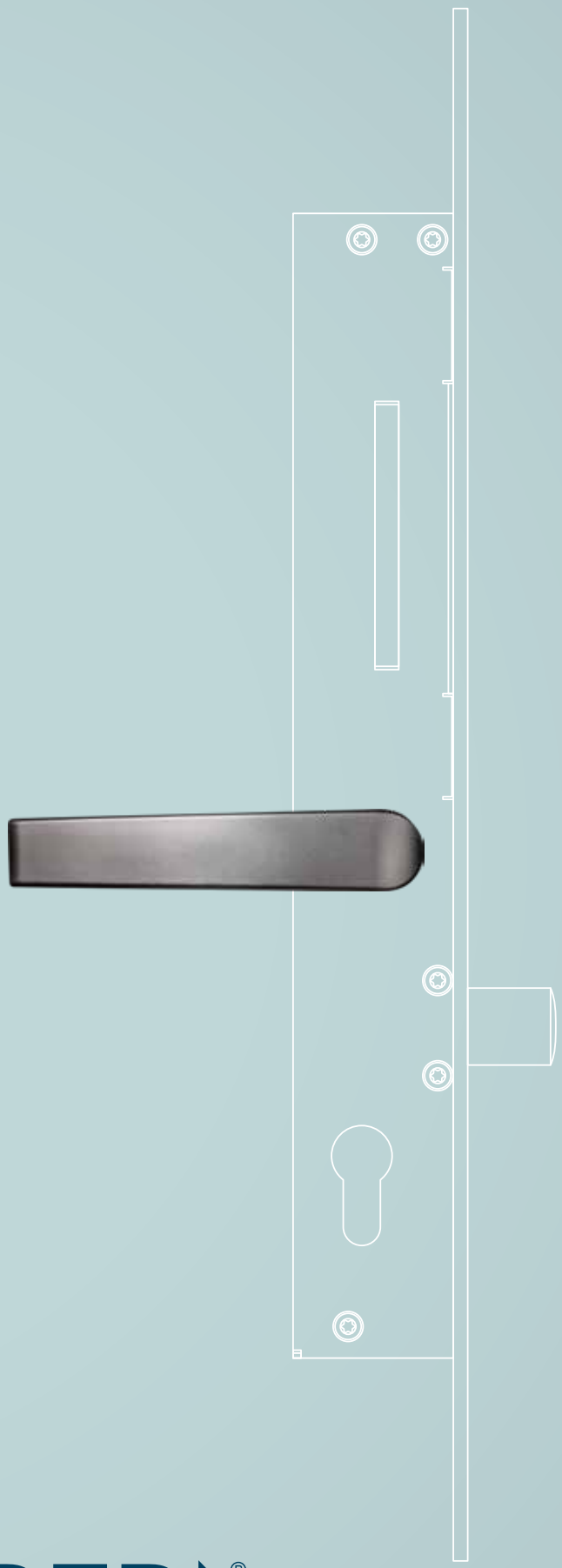

OPERA®

OPERATING ACCESS

OPERA
OPERATING ACCESS

Opera is an independent company.
The production premises are based in Modena (Italy), town with an old tradition in lock manufacturing.

The company was set up in 1997 and it is specialised in the manufacturing of electronic locks and doors accessories. From a company that manufactured products, Opera has evolved into a company that offers solutions aimed at improving the security and safety of individuals and their belongings. Today with more than 20 people and advanced production means, Opera is at the top of the European ranking of locks manufacturers.

INNOVATORS SINCE 1997

"It doesn't make sense to hire smart people and tell them what to do; we hire smart people so they can tell us what to do"

Steve Jobs

This is the way we move in our job. We transform ideas in projects because we believe in our people and in their skills.

27 YEARS OF WORK IN THE SECURITY BUSINESS

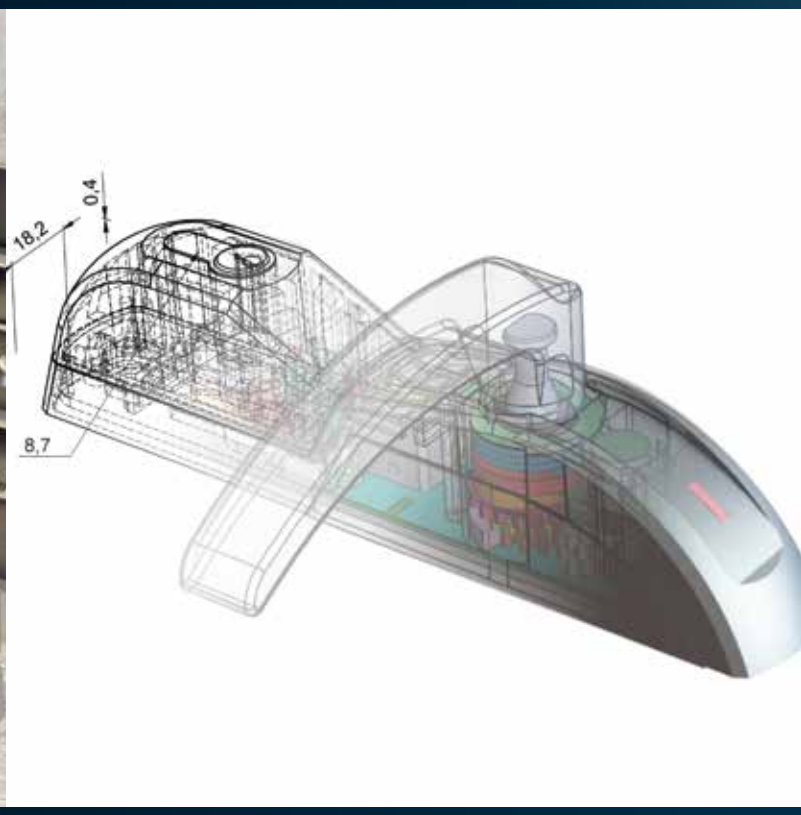

“MADE IN OPERA” THIS IS MUCH MORE THAN MADE IN ITALY.

100% LISTENING

Installation technicians, doors manufacturers, technical departments of the biggest companies producing security products, are our source. The request comes from the market and becomes our goal. To manufacture a product as the customer wishes is the only way of working we believe in.

100% SKILL

Engineers, electronics experts, mechanical technicians are our Research and Development department. We perform our ideas using the most innovative project software and the most modern laser cutting machines for quick prototyping.

100% MADE IN ITALY

We produce in Italy. We dot not outsource production abroad; we believe in the quality of Italian companies and of our suppliers who are 90% from within Italy. Our high quality products are produced respecting environment and all relevant European standards.

100% COMMUNICATION

Our products fit for everybody. In 2013 we have created OPERA ACADEMY to update and inform the sales net about new products and field rules. In our headoffice in Modena, there is a dedicated meeting room at your disposal. You can contact us to fix an appointment, you will be our guest. If you wish, you could also visit our town and enjoy motors and gastronomy tours with professional tourist guides.

100% HOSPITABILITY

Technical data, prices, positive and negative peculiarities are visible to everybody. You only have to call or visit us on the web to get all the product information you need.

Index

www.opera-italy.com

SAFETY

ELECTROMAGNETIC SECURITY LOCKS AND ELECTROMAGNETIC LOCKS ACCESSORIES, SAFETY SERIES 38-56

ELECTRONIC CONTROL UNITS FOR ELECTROMAGNETIC SECURITY LOCKS, SAFETY SERIES 57

OPERATING SYSTEM FOR CONTROLLED EMERGENCY EXITS, EXIT SYSTEM SERIES 58-60

SELF-CONTROLLED ALARM SYSTEM FOR CONTROLLED EMERGENCY EXITS, ALARM SYSTEM SERIES 61

FIRE CONTROL

HOLD OPEN ELECTROMAGNETS FOR FIRE DOORS, FIRE CONTROL SERIES 62-73

HYDRAULIC DAMPERS AND HYDRAULIC IMPACT SHOCK ABSORBERS FOR SLIDING FIRE DOORS 74-76

SINGLE ZONE FIRE PANEL, FIRE CONTROL SERIES 77-79

SMART TRIM

ELECTRIC HANDLES, SMART TRIM 80-89

OMNIA

ELECTRIC STRIKES, OMNIA MICRO SERIES 90-95

ELECTRIC STRIKES, OMNIA RADIAL SLIDE SERIES, RADIAL PRELOAD 96-97

SECURITY ELECTRIC STRIKES, OMNIA 1000 REVERSIBLE 98

SECURITY ELECTRIC STRIKES FOR ANTI-PANIC BARS, OMNIA EXIT SERIES 99

SECURITY ELECTRIC STRIKES, OMNIA BLINDO 700/BLINDO 1000/GLASS SERIES 100-102

FRONT PLATES FOR SECURITY ELECTRIC STRIKES AND LATCH LOCKS 103-111

OMNIA GEMINA 112-113

QUADRA

HORIZONTAL SECURITY SOLENOID LOCKS, QUADRA MICRO SERIES 114-122

HORIZONTAL SECURITY SOLENOID LOCKS, QUADRA SERIES 123-127

ACCESSORIES FOR SECURITY SOLENOID LOCKS, QUADRA SERIES 128 -129

ARCA

ELECTRIC CABINET LOCKS, ARCA/ARCA KEY/ARCA SLIDE SERIES 130-143

Index

www.opera-italy.com

ELECTROMECHANICAL LOCKS FOR DOUBLE ACTION DOORS, SWING SERIES 144

OPERATING SYSTEM FOR SINGLE OR INTERLOCKED DOORS 145

COMMAND CONSOLE, CONTROL SYSTEM SERIES 146-151

PRIMA

VERTICAL SECURITY SOLENOID LOCKS, PRIMA SERIES 152-163

VERTICAL SECURITY SOLENOID LOCKS, PRIMA OP SERIES 164-165

VERTICAL SECURITY SOLENOID LOCKS, PRIMA MAXI SERIES 166-169

CLASSICA

HORIZONTAL SECURITY SOLENOID LOCKS, CLASSICA SERIES 170-177

GATE BOLT

SURFACE FIXING SECURITY LOCKS, GATE LOCK SERIES 178-183

SECURITY ELECTRIC SOLENOID LOCK, GATE BOLT SERIES 184-189

MAXIMA

MAXIMA MOTOR LOCK WITH PIVOTING BOLT 190-198

MOTORISED SWINGING DEADBOLT ELECTROMECHANICAL LOCKS SENSITIVE BARS AND CARDS 199

PROFILO

INDICATOR LAMPS AND INTERCOM SYSTEM, PROFILO DESIGN/ PROFILO/PROFILO OP SERIES 200-214

ACCESSORIES FOR ELECTRONIC CIRCUITS 215

DOOR ALIGNMENT SENSORS AND CONTACTS 216

LEAD COVERS AND ANTI-REBOUND BALL-CATCH 217

BOXES - TRANSFORMERS - TIMERS - POWER SUPPLIERS - BACKUP BATTERIES 218-219

REMOTE CONTROLS AND RECEIVERS 220-223

Index

www.opera-italy.com

ACCESS

ACCESS CONTROL SYSTEM, ACCESS MULTILINK NET SERIES 224-232

DEVICES FOR ACCESS MULITILINKNET AND MINILINK SERIES AND ACCESSORIES 233-237

DIGITAL DOOR VIEWER - VISION SERIES 238-239

ACCESS CONTROL FOR SELF-SERVICE BANK ATM 240-245

ACCESS CONTROL SYSTEM, ACCESS KEYPAD SERIES 246-248

ACCESS CONTROL SYSTEM, ACCESS TOUCH KEY SERIES 249

ACCESS CONTROL SYSTEM, ACCESS BIOMETRIC SERIES 250-251

DOORA - GSM DOOR OPENER 252-265

PEOPLE COUNTER

PEOPLE COUNTER SYSTEM, PEOPLE COUNTER SERIES 266-273

HIGH SECURITY FLAT WRENCH CYLINDERS 274

SALES CONDITIONS 275

Index

PAGE	ITEM	DESCRIPTION	€
79/219	00112	Back up battery 12V / 1,2 Ah	43,90
53	00142	Connector for magnetic lock 142 series	17,80
53	00147	Spacer for magnetic lock 147 series	13,00
53	00147N	Spacer for magnetic lock 147 series	15,40
183	00171A	Pair of round cylinder for lock series 280	25,00
219	00212	Back up battery 12V / 2,2 Ah	47,90
134	00228	1mm spacer	1,80
182	00280A	Spacer for 280 series	21,00
182	00280AN	Spacer for 280 series	28,00
182	00280C	Spacer for 280 series	3,20
183	00280.1D	Fixing cover for cylinder CISA on electric lock 280 series - Right hand	34,00
183	00280.2D	Fixing cover for cylinder CISA on electric lock 280 series - Left hand	34,00
183	00280.1E	Fixing cover for cylinder ISEO on electric lock 280 series - Right hand	34,00
183	00280.2E	Fixing cover for cylinder ISEO on electric lock 280 series - Left hand	34,00
183	00280.1F	Fixing cover for cylinder VIRO on electric lock 280 series - Right hand	34,00
183	00280.2F	Fixing cover for cylinder VIRO on electric lock 280 series - Left hand	34,00
183	00280.1G	Fixing cover for cylinder FEB on electric lock 280 series - Right hand	34,00
183	00280.2G	Fixing cover for cylinder FEB on electric lock 280 series - Left hand	34,00
183	00280.1H	Fixing cover for cylinder YALE on electric lock 280 series - Right hand	34,00
183	00280.2H	Fixing cover for cylinder YALE on electric lock 280 series - Left hand	34,00
182	00280S	Spacer for electric lock 280 series	5,20
182	00280UNI	Spacer for electric lock 280 series	45,10
183	00281.1	Striking plate (replacement) 280 series	52,20
183	00281.2	Striking plate (replacement) 280 series	52,20
183	00281CP	Striking plate (replacement) 280 series	45,00
183	00281.1N	Striking plate (replacement) 280 series	55,70
183	00281.2N	Striking plate (replacement) 280 series	55,70
182	00282	Cover for 280 series	30,80
187	00287B	Magnet for series 28720 - color Brown	12,00
187	00287W	Magnet for series 28720 - color White	12,00
99	00360B	Spacer for rim electric strike series 360B	2,00
99	00360BG	Spacer for rim electric strike series 360B	2,00
99	00360C	Spacer for rim electric strike series 360C	2,00
85	00416	Sottopiastra for Smart Trim electric handle	26,10
87	0042801A	Mounting plate for panic bar ANTIPANIC series 400	72,30
87	0042801B	Mounting plate for panic bar ANTIPANIC series 600	72,30
87	0042803	Mounting plate for panic bar ASSA ABLOY START-TOUCH	72,30
87	0042804	Mounting plate for panic bar MOD. CISA	72,30
87	0042805	Mounting plate for panic bar ASSA ABLOY MILLENIUM PUSH	72,30
87	0042806	Mounting plate for panic bar FAPIM-ISEO	72,30
87	0042807.A	Mounting plate for panic bar ASSA ABLOY series 89-CROSS BAR	72,30
87	0042807.B	Mounting plate for panic bar ASSA ABLOY series FLUID ROTATIVO	72,30
87	0042808A	Mounting plate for panic bar SAVIO BERNINI series 6000-CELLINI 6100	72,30
87	0042808B	Mounting plate for panic bar SAVIO JUVARRA 6010-BRUNELLESCHI 6110	72,30
87	0042808C	Mounting plate for panic bar SAVIO CIRCEO series KH	72,30
87	0042809	Mounting plate for panic bar ASSA ABLOY series UNIVERSAL	72,30
87	0042810	Mounting plate for panic bar ASSA ABLOY COMPOSIT	72,30
87	0042811	Mounting plate for panic bar VACHETTE	72,30
238	00577	Metal tube for fixing door viewer	7,70
258	00661A00	Twisted cable for Doora system	8,30

Index

PAGE	ITEM	DESCRIPTION	€
219	00712	Back up battery 12V / 7Ah	57,60
53	01127	Armature plate for magnetic locks series Safety (replacement)	55,70
53	01130	Armature plate for magnetic locks series Safety (replacement)	64,00
53	01134	Armature plate for magnetic locks series Safety (replacement)	59,30
53	01137	Armature plate for magnetic locks series Safety (replacement)	59,30
53	01137L	Armature plate for magnetic locks series Safety (replacement)	59,30
66	01620	Door holders	37,10
66	01620I	Door holders with plate	44,60
66	01630	Door holders	41,10
66	01630I	Door holders con Fix striking plate	58,60
72	01630ILV	Door holders with plate	65,70
70	01740	Fixing bracket for door holders color Black	66,40
70	01740B	Fixing bracket for door holders color White	66,40
70	01740BF	Fixing bracket for door holders color White	49,20
70	01740F	Fixing bracket for door holders color Black	49,20
70	01740M	Fixing bracket for door holders color Black	72,20
67/211	01780	Aluminium box	31,20
70	01800Z	Fix striking plate for series 190	16,20
70	01805Z	Adjustable striking plate for series 190	20,30
274	01808	Cutted key	39,10
274	01808K	KA cutted key	39,10
70	01810Z	Fix striking plate for series 181	32,60
70	01815Z	Adjustable striking plate for series 181	36,80
66	01820	Door holders	58,10
66	01820I	Door holders with plate	74,70
66	01830	Door holders	62,20
66	01830I	Door holders with fixing striking plate	94,80
128	02060	Bracket for the Side Mounting of the Quadra Micro solenoid bolts Series	17,80
128	02065	Carter for Quadra Micro solenoid bolts series	81,80
128	02114	Front Panel with European Profile Cylinder Opening Mechanism	71,10
128	02114S	Front Panel with Cruciform key Cylinder Opening Mechanism	116,20
128	02160	Bracket for the Side Mounting of the Quadra Electropiston Series	17,80
128	02165	Carter for Quadra solenoid bolts Series	81,80
128	02208	Striking plate for solenoid bolts series Quadra Micro	33,20
128	02208R	Striking plate for solenoid bolts series Quadra Micro	37,90
128	02218	Striking plate for solenoid bolts series Quadra	33,20
128	02218R	Striking plate for solenoid bolts series Quadra	37,90
216	02221	Recessed Magnetic Sensor	67,60
216	02223	Rim magnetic sensor	23,70
216	02225	Mechanical contact	43,90
140	02238	Recessed Striking plate - Spare part	118,60
140	02238CF	Fix striking plate - spare part	49,80
140	02238CFL	Fix striking plate - spare part	52,70
274	02250	Defender - armoured rose	49,80
197	02250L	Defender - armoured rose	80,60
187	02250LG	Defender - armoured rose	80,60
274	02251	Spacer for defender	2,30
197	02255	Striking plate for Electric lock Maxima Series	48,60
162/177	02258D	Striking plate for solenoid bolts series Prima and Classica	43,30
162/177	02258DSA	Striking plate for solenoid bolts series Prima and Classica	71,80

PAGE	ITEM	DESCRIPTION	€
162/177	02259	Striking plate for solenoid bolts series Prima and Classica	43,30
162/177	02259SA	Striking plate for solenoid bolts series Prima and Classica	71,80
177	02260D	Striking plate for solenoid bolts series Prima and Classica	43,30
177	02260DSA	Striking plate for solenoid bolts series Prima and Classica	71,80
186	02287	Fixing plate for Legion Motor Bolt	39,10
188	02288	Fixing plate for 288 Gate Bolt	39,10
184/186	02290	Floor plate for solenoid bolts series Gate Bolt / Legion	55,70
186	02291	Rim striking plate for Legion Motor Bolt	71,10
186	02291N	Rim striking plate for Legion Motor Bolt	71,10
186	02292	Striking plate Spacer for Legion Motor Bolt	11,90
186	02293	Striking plate Spacer for Legion Motor Bolt	3,60
187	02295	Fail safe circuit	177,80
144	02300	Striking plate for electric lock series Swing (replacement)	20,20
144	02301	Striking plate for electric lock series Swing (replacement)	26,10
140	02308.1	Rim cover carter for Arca Key and Arca Slide series	80,60
140	02308.2	Rim cover carter for Arca Key and Arca Slide series	80,60
141	02308.1S	Rim cover carter for Arca Slide S series	80,60
141	02308.2S	Rim cover carter for Arca Slide S series	80,60
140	02308.1CF	Rim cover carter for Arca Key and Arca Slide series	80,60
140	02308.2CF	Rim cover carter for Arca Key and Arca Slide series	80,60
141	02308.1CFS	Rim cover carter for Arca Slide S series	80,60
141	02308.2CFS	Rim cover carter for Arca Slide S series	80,60
162	0230930DX	Rim cover carter for Prima solenoid bolt series	174,30
162	0230930SX	Rim cover carter for Prima solenoid bolt series	174,30
176	02708	Rim cover carter for Classica solenoid bolt series	205,10
50	03000	L mounting bracket for Safety 130-131-140 series	39,20
50	03000N	L mounting bracket for Safety 130-131-140 series	45,60
50	03001	L Z mounting bracket for Safety 130-131-140 series	136,80
50	03001N	L Z mounting bracket for Safety 130-131-140 series	156,90
50	03002	L mounting bracket for Safety 130-131-140 series	40,80
50	03003	Fixing plate for fire proof doors	42,70
50	03004	Fixing plate for fire proof doors	26,10
50	03005	Cover carter for Safety 130-131 series	47,40
50	03006	Cover carter for Safety 130-131 series	56,90
50	03007	Fixin plate for glazed doors	64,00
104	03010	Short front plate steel made gray painted for Omnia series	4,40
104	03010S	Short front plate steel made gray painted for Omnia series	4,40
104	03030	Long front plate steel made gray painted for Omnia series	6,90
104	03030CRO	Long front plate chrome plated for Omnia series	9,70
104	03030GD	Long front plate steel made gold painted for Omnia series	6,90
104	03030.1GDR	Long front plate gold plated for Omnia series	17,40
104	03030.2GDR	Long front plate gold plated for Omnia series	17,40
105	03031	Long front plate stainless steel made for Omnia series	18,70
105	03130	Long front plate steel made gray painted for Omnia series	7,80
105	03131	Long front plate stainless steel made for Omnia series	18,70
105	03132	Long front plate steel made gray painted for Omnia series	19,40
105	03162	Angular short front plate steel made gold painted for Omnia series	13,50
105	03162BA	Angular short front plate steel made gold painted for Omnia series	13,50
106	03310	Short front plate for Omnia series 16	5,80
106	03310R	Short front plate for Omnia Radial series	6,30

Index

PAGE	ITEM	DESCRIPTION	€
106	03330	Long front plate for Omnia series 16	9,10
106	03331	Long front plate for Omnia series 16	19,40
106	03342.1	Angular long front plate for Omnia 16	19,40
106	03342.2	Angular long front plate for Omnia 16	19,40
107	03370.1	Long front plate for Omnia Blindo 700 series	18,70
107	03370.2	Long front plate for Omnia Blindo 700 series	18,70
107	03370R	Long front plate for Omnia Blindo 700 series	21,30
107	03371.1	Long front plate for Omnia Blindo 700 series	18,70
107	03371.2	Long front plate for Omnia Blindo 700 series	18,70
107	03372	Long front plate for Omnia Micro series	18,70
107	03374.1	Long front plate for Omnia Blindo 700 series	18,70
107	03374.2	Long front plate for Omnia Blindo 700 series	18,70
107	03374R	Long front plate for Omnia Blindo 700 series	21,30
107	03375.1	Long front plate for Omnia Blindo 700 series	18,70
107	03375.2	Long front plate for Omnia Blindo 700 series	18,70
108	03410	Short front plate in aluminium for Omnia series	10,30
108	03411	Short front plate stainless steel made for Omnia series	11,70
108	03431	Long front plate stainless steel made for Omnia 1000 series	62,80
108	03442.1	Angular long front plate steel made gold painted for Omnia Micro series	19,90
108	03442.2	Angular long front plate steel made gold painted for Omnia Micro series	19,90
108	03442.1BA	Angular long front plate steel made gold painted for Omnia Micro series	19,90
108	03442.2BA	Angular long front plate steel made gold painted for Omnia Micro series	19,90
108	03445.1	Angular long front plate steel made satinato nichelato for Omnia Micro series	22,40
108	03445.2	Angular long front plate steel made satinato nichelato for Omnia Micro series	22,40
108	03445.1GD	Angular long front plate steel made gold plated for Omnia Micro series	26,10
108	03445.2GD	Angular long front plate steel made gold plated for Omnia Micro series	26,10
108	03446.1	Angular long front plate steel made satinato nichelato for Omnia Micro series	22,40
108	03446.2	Angular long front plate steel made satinato nichelato for Omnia Micro series	22,40
108	03446.1GD	Angular long front plate steel made gold plated for Omnia Micro series	26,10
108	03446.2GD	Angular long front plate steel made gold plated for Omnia Micro series	26,10
51	03500	L bracket for magnets Safety 127 series	37,60
51	03500N	L bracket for magnets Safety 127 series	44,50
51	03501	L Z bracket for magnets Safety 127 series	79,80
51	03501N	L Z bracket for magnets Safety 127 series	91,20
199	03510	Vertical handle	151,80
199	03515	Vertical handle	151,80
199	03520	Horizontal handle	151,80
199	03525	Horizontal handle	151,80
51	03600	L bracket for magnets Safety 128 series	37,60
51	03600N	L bracket for magnets Safety 128 series	44,50
51	03601	L Z bracket for magnets Safety 128 series	117,40
51	03601N	L Z bracket for magnets Safety 128 series	135,70
51	03700	L bracket for magnets Safety 136 - 137 series	37,60
51	03700N	L bracket for magnets Safety 136 - 137 series	44,50
51	03701	L Z bracket for magnets Safety 136 - 137 series	135,70
51	03701N	L Z bracket for magnets Safety 136 -137 series	155,00
51	03705	Cover carter for Safety 130-131 series	47,40
52	03706	Cover carter for Safety 130-131 series	56,90
52	03707	L bracket with cover Safety 136 - 137	65,00
52	03707L	L bracket with cover Safety 13700TDL	65,00

PAGE	ITEM	DESCRIPTION	€
52	03707LN	L bracket with cover Safety 13700TDLN	78,70
52	03707N	L bracket with cover Safety 136 - 137	78,70
52	03708	Mounting bracket for magnetic lock Safety series	150,50
52	03708L	Mounting bracket for magnetic lock Safety series	188,10
52	03708LN	Mounting bracket for magnetic lock Safety series	214,30
52	03708N	Mounting bracket for magnetic lock Safety series	169,90
52	03709	Mounting bracket for magnetic lock Safety series	80,90
52	03709N	Mounting bracket for magnetic lock Safety series	94,60
52	03710	Mounting bracket for magnetic lock Safety series	80,90
52	03710N	Mounting bracket for magnetic lock Safety series	94,60
207	OP04500 56	Indicator lamp	213,40
207	OP04500 58	Indicator lamp	249,00
207	OP04501 56	Indicator lamp	154,10
207	OP04501 58	Indicator lamp	201,60
197	04925	Spare motor (replacement)	211,00
218	05110G	Manual call point - yellow	29,90
79/218	05110R	Manual call point - red	29,90
218	05110V	Manual call point - green	29,90
78	05115	Push button / reset	24,90
78	05203A	Smoke & heat detector	87,10
78	05203ABRA	Smoke & heat detector	154,70
78	05204A	Smoke & heat detector	64,70
78	05204ABRA	Smoke & heat detector	132,30
78	05206A	Testing spray	67,60
78	05207	Fire alarm sounder	92,50
218	05210	Current transformer 240/10 Vac for electric lock series Maxima	56,90
218	05211	Current transformer 240/12 Vac for incontri elettrici Omnia series	39,80
129	05216	Circuit PWM for series Quadra	70,00
215	05257	Intercom interface for electric lock management	106,70
215	05258	Relay module	48,60
215	05259-12	Magnetic sensor contact circuit	26,10
215	05259-24	Magnetic sensor contact circuit	26,10
215	05260	Automatic door timer circuit	93,70
218	05301C	Weekly timer	298,80
218	05310	Switching power supply 12 Vdc/1,5 A with timing adjustement	142,30
219	05312A	Switching power supply 12 Vdc / 3 A with back-up battery charger	280,40
219	05320A	Switching power supply 12 Vdc / 3 A with back-up battery charger	153,90
219	05320BD	Switching power supply 12 Vdc / 1,5 A DIN rail	153,90
219	05320XM	Switching power supply 12 Vdc / 26,5 A with back-up battery charger	183,50
219	05325A	Switching power supply 24 Vdc / 3 A with back-up battery charger	296,40
219	05326A	Switching power supply 24 Vdc / 10 A with back-up battery charger	307,80
219/265	05330BD	Switching power supply 24 Vdc / 630 mA DIN rail	153,90
219	05330XS	Switching power supply 24 Vdc / 1 A with back-up battery charger	159,60
219	05331A	Switching power supply 24 Vdc / 3 A with back-up battery charger	169,90
219	05332A	Switching power supply 24 Vdc / 10 A with back-up battery charger	183,50
197	05426	Cable for Maxima Lock	9,50
219	05346A	Plug in power supply for console ref. 54614A	11,00
160	05428	Cable for Prima lock	9,50
214	05501	Rim Aluminium box for indicator lamp ref. 55010 - 55013	40,70
214	05501BR	Rim Aluminium box for indicator lamp ref. 55010BR - 55013BR	40,70

Index

PAGE	ITEM	DESCRIPTION	€
214	05501N	Rim Aluminium box for indicator lamp ref. 55010N - 55013N	40,70
214	05502	Rim Aluminium box for indicator lamp ref. 55011	41,90
214	05502BR	Rim Aluminium box for indicator lamp ref. 55011BR	41,90
214	05502N	Rim Aluminium box for indicator lamp ref. 55011N	41,90
214/235	05502PD	Rim Aluminium box for indicator lamp series Profilo Design	45,10
244	05502PDB	Rim Aluminium box for indicator lamp	65,00
214	05502PDBR	Rim Aluminium box for indicator lamp	45,10
214/235	05502PDN	Rim Aluminium box for indicator lamp series Profilo Design	45,10
235	05502T	Protective canopy	41,50
214	05503	Rim Aluminium box for indicator lamp ref. 55012	46,80
214	05503BR	Rim Aluminium box for indicator lamp ref. 55012BR	46,80
214	05503N	Rim Aluminium box for indicator lamp ref. 55012N	46,80
208	05512	Control unit for multiple intercom connections	213,40
208	05513	Intercom receiver	92,50
208	05514	Multi door intercom receiver	341,50
208	05515	Porter intercome	124,50
212	05540	Rim mounting box	19,00
212	05540N	Rim mounting box	19,00
244	05645	Time restart button	94,80
244	05648	Louder	66,40
245	05651	Canopy	166,00
245	05652	Rim box	78,00
245	05653	Rim box	128,00
250	05820	Biometric system	189,70
250	05820SB	Biometric system	249,00
211	05820P	Biometric system	110,00
251	05821	Biometric system	105,50
272	05912WEB	Counter people software	474,20
229	05913	Convertitore seriale	580,90
271	05914	Concentratore di dati wi-fi	373,50
271	05916	SD memory card	24,90
271	05917	Battery for people counter	20,20
274	08010 06	Double Euro-profile cylinder	96,00
274	08010 07	Double Euro-profile cylinder	100,80
274	08010 08	Double Euro-profile cylinder	100,80
274	08010 09	Double Euro-profile cylinder	106,70
274	08010 10	Double Euro-profile cylinder	107,90
274	08010 11	Double Euro-profile cylinder	109,10
274	08010 12	Double Euro-profile cylinder	112,60
274	08010 13	Double Euro-profile cylinder	122,10
274	08010 14	Double Euro-profile cylinder	123,30
274	08010 15	Double Euro-profile cylinder	123,30
274	08010 19	Double Euro-profile cylinder	131,60
274	08010 20	Double Euro-profile cylinder	131,60
274	08010 21	Double Euro-profile cylinder	131,60
274	08010 22	Double Euro-profile cylinder	131,60
274	08030 01	Single Euro-profile cylinder	73,50
274	08030 04	Single Euro-profile cylinder	73,50
274	08030 05	Single Euro-profile cylinder	74,70
274	08030 06	Single Euro-profile cylinder	74,70

PAGE	ITEM	DESCRIPTION	€
274	08030 08	Single Euro-profile cylinder	75,90
274	08030 11	Single Euro-profile cylinder	75,90
274	08030 13	Single Euro-profile cylinder	77,10
274	08030 20	Single Euro-profile cylinder	80,60
274	08040 00	Key selector	353,60
217	08600	Concealed door loop	40,30
217	08600XL	Concealed door loop	52,00
217	08601	Concealed door loop	62,80
217	08605	Concealed door loop	30,80
217	08608	Door loop	58,10
217	08610	Door loop	34,90
217	08619	Door loop	39,80
217	08620	Door loop	39,80
217	08630A	Door loop with metal fixing terminals	29,60
217	08640	Door loop with metal fixing terminals	41,50
217	08641	Door loop with metal fixing terminals	46,20
217	08650	Tappet contacts	13,00
216	08700	Anti rebound ball-catch	42,70
109	08710	Latch lock	23,70
109	08711A	Latch lock	39,10
42	12500	Electromagnetic lock Safety series	213,20
42	12700	Electromagnetic lock Safety series	213,20
42	12800	Electromagnetic lock Safety series	213,20
42	12800M	Electromagnetic lock Safety series	241,70
42	12800MN	Electromagnetic lock Safety series	265,60
42	12800N	Electromagnetic lock Safety series	237,10
43	13000	Electromagnetic lock Safety series	291,80
43	13000N	Electromagnetic lock Safety series	314,60
43	13100	Electromagnetic lock Safety series	327,20
43	13100N	Electromagnetic lock Safety series	351,10
43	13100TD	Electromagnetic lock Safety series	362,50
43	13100TDN	Electromagnetic lock Safety series	386,50
44	13400	Electromagnetic lock Safety series	278,20
44	13400M	Electromagnetic lock Safety series	298,70
44	13500	Electromagnetic lock Safety series	213,20
44	13500M	Electromagnetic lock Safety series	237,10
44	13600	Electromagnetic lock Safety series	228,00
44	13600N	Electromagnetic lock Safety series	251,90
45	13700	Electromagnetic lock Safety series	248,50
49	13700KIT TF	Electromagnetic lock Safety series	515,10
49	13700KIT TFB	Electromagnetic lock Safety series	699,20
45	13700N	Electromagnetic lock Safety series	272,50
45	13700TD	Electromagnetic lock Safety series	279,30
45	13700TDL	Electromagnetic lock Safety series	296,40
45	13700TDN	Electromagnetic lock Safety series	303,20
46	13800	Shear-Lock	568,90
46	13900	Micro Shear lock	294,10
46	13900M	Micro Shear lock	337,40
46	14000	Electromagnetic lock Safety series	655,50
46	14000N	Electromagnetic lock Safety series	693,10

Index

PAGE	ITEM	DESCRIPTION	€
47	14212R	Electromagnetic lock Safety series	314,60
47	14224R	Electromagnetic lock Safety series	314,60
47	14710TD	Electromagnetic lock Safety series	433,20
47	14710TDN	Electromagnetic lock Safety series	456,00
48	14800TD	Electromagnetic lock Safety series	866,40
66	17003A	Door holder for external use	205,20
67	18003	Flush mounting door holder	38,90
67	18004	Door holder	77,70
67	18005	Floor mounting door holder - black	132,00
67	18005B	Floor mounting door holder - white	132,00
69	18100	Door holder - 140 Kg	80,30
69	18101	Door holder - 140 Kg	82,90
69	18104	Door holder - 140 Kg	99,60
69	18104RES	Door holder - 140 Kg - Resin-coated	140,00
67	19000	Door holder - Black ABS cover - 24 Vdc	37,30
72	19000AC	Door holder - Black ABS cover - 24 Vac	47,60
72	19000ALV	Door holder - Black ABS cover - 12 Vac	55,20
72	19000DV	Door holder - Black ABS cover - 24/48 Vdc	47,30
67	19000GC	Door holder - Gray ABS cover - 24 Vdc	37,30
67	19000GCDV	Door holder - Gray ABS cover - 24/48 Vdc	47,30
72	19000GCHV	Door holder - Gray ABS cover - 48 Vdc	44,40
67	19000GCR	Door holder - Gray ABS cover - 24 Vdc - adjustable holding force	47,70
72	19000HV	Door holder - Black ABS cover - 48 Vdc	44,40
72	19000LF	Door holder - Black ABS cover - Holding force 20 Kg.	42,30
72	19000LV	Door holder - Black ABS cover - 12 Vdc	44,40
72	19000M	Door holder - Black ABS cover - 24 Vdc with reed	72,20
67	19000R	Door holder - Black ABS cover - 24 Vdc - adjustable holding force	47,70
67	19001	Door holder - Black ABS cover - 24 Vdc	39,60
72	19001AC	Door holder - Black ABS cover - 24 Vac	49,90
72	19001ALV	Door holder - Black ABS cover - 12 Vac	57,50
67	19001DV	Door holder - Black ABS cover - 24/48 Vdc	49,60
67	19001GC	Door holder - Gray ABS cover - 24 Vdc	39,60
72	19001GCDV	Door holder - Gray ABS cover - Dual Voltage	49,60
72	19001GCHV	Door holder - Gray ABS cover - 48 Vdc	44,40
72	19001GCR	Door holder - Gray ABS cover - 24 Vdc - adjustable holding force	49,90
72	19001HV	Door holder - Black ABS cover - 48 Vdc	46,70
72	19001LF	Door holder - Black ABS cover - Holding force 20 Kg.	44,60
72	19001LV	Door holder - Black ABS cover - 12 Vdc	46,70
72	19001M	Door holder - Black ABS cover - 24 Vdc with reed	74,50
67	19001R	Door holder - Black ABS cover - 24 Vdc - adjustable holding force	49,90
68	19002	Door holder - S.a.a aluminium cover - 24 Vdc	41,50
72	19002AC	Door holder - S.a.a aluminium cover - 24 Vac	51,80
72	19002ALV	Door holder - S.a.a aluminium cover - 12 Vac	59,40
72	19002DV	Door holder - S.a.a aluminium cover - Dual Voltage 24/48 Vdc	51,50
68	19002GD	Door holder - S.a.a aluminium cover Gold plated - 24 Vdc	46,70
72	19002GDAC	Door holder - S.a.a aluminium cover Gold plated - 24 Vac	57,00
68	19002GDDV	Door holder - S.a.a aluminium cover Gold plated - Dual Voltage 24/48 Vdc	56,70
72	19002GDHV	Door holder - S.a.a aluminium cover Gold plated - 48 Vdc	53,80
72	19002GDLF	Door holder - S.a.a aluminium cover Gold plated - Holding force 20 Kg.	51,70
72	19002GDLV	Door holder - S.a.a aluminium cover Gold plated - 12 Vdc	53,80
72	19002GDM	Door holder - S.a.a aluminium cover Gold plated - 24 Vdc with reed	81,60

PAGE	ITEM	DESCRIPTION	€
68	19002GDR	Door holder - S.a.a aluminium cover Gold plated - 24 Vdc - adjustable holding force	57,00
72	19002HV	Door holder - S.a.a aluminium cover - 48 Vdc	48,60
72	19002LF	Door holder - S.a.a aluminium cover - Holding force 20 Kg.	46,50
72	19002LV	Door holder - S.a.a aluminium cover - 12 Vac	48,60
72	19002M	Door holder - S.a.a aluminium cover - 24 Vdc with reed	76,40
68	19002N	Door holder - Dark aluminium cover - 24 Vdc	41,50
72	19002NAC	Door holder - Dark aluminium cover - 24 Vac	51,80
72	19002NDV	Door holder - Dark aluminium cover - Dual Voltage 24/48 Vdc	51,50
72	19002NR	Door holder - Dark aluminium cover - 24 Vdc - adjustable holding force	51,80
72	19002NHV	Door holder - Dark aluminium cover - 48 Vdc	48,60
72	19002NLF	Door holder - Dark aluminium cover - Holding force 20 Kg.	46,50
72	19002NLV	Door holder - Dark aluminium cover - 12 Vdc	48,60
72	19002NM	Door holder - Dark aluminium cover - 24 Vdc with reed	76,40
72	19002R	Door holder - S.a.a aluminium cover - 24 Vdc - adjustable holding force	51,80
118	20610-12	Mortice solenoid bolt QUADRA MICRO - 12 Vdc	254,20
118	20610-24	Mortice solenoid bolt QUADRA MICRO - 24 Vdc	254,20
121	20610XS-12	Mortice solenoid bolt QUADRA MICRO - 12 Vdc	242,80
121	20610XS-24	Mortice solenoid bolt QUADRA MICRO - 24 Vdc	242,80
118	20611-12	Mortice solenoid bolt QUADRA MICRO - 12 Vdc	234,80
118	20611-24	Mortice solenoid bolt QUADRA MICRO - 24 Vdc	234,80
121	20611XS-12	Mortice solenoid bolt QUADRA MICRO - 12 Vdc	222,30
121	20611XS-24	Mortice solenoid bolt QUADRA MICRO - 24 Vdc	222,30
118	20612	Mortice solenoid bolt QUADRA MICRO - 12/24Vdc with electronic	342,00
118	20613-12	Mortice solenoid bolt QUADRA MICRO - 12 Vdc	165,30
118	20613-24	Mortice solenoid bolt QUADRA MICRO - 24 Vdc	165,30
121	20613XS-12	Mortice solenoid bolt QUADRA MICRO - 12 Vdc	153,90
121	20613XS-24	Mortice solenoid bolt QUADRA MICRO - 24 Vdc	153,90
121	20613XSAM-12	Mortice solenoid bolt QUADRA MICRO - 12 Vdc	163,40
121	20613XSAM-24	Mortice solenoid bolt QUADRA MICRO - 24 Vdc	163,40
119	20810-12	Mortice solenoid bolt QUADRA MICRO - 12 Vdc	254,20
119	20810-24	Mortice solenoid bolt QUADRA MICRO - 24 Vdc	254,20
121	20810XS-12	Mortice solenoid bolt QUADRA MICRO - 12 Vdc	242,80
121	20810XS-24	Mortice solenoid bolt QUADRA MICRO - 24 Vdc	242,80
119	20811-12	Mortice solenoid bolt QUADRA MICRO - 12 Vdc	234,80
119	20811-24	Mortice solenoid bolt QUADRA MICRO - 24 Vdc	234,80
121	20811XS-12	Mortice solenoid bolt QUADRA MICRO - 12 Vdc	222,30
121	20811XS-24	Mortice solenoid bolt QUADRA MICRO - 24 Vdc	222,30
119	20812	Mortice solenoid bolt QUADRA MICRO - 12/24Vdc with electronic	342,00
119	20813-12	Mortice solenoid bolt QUADRA MICRO - 12 Vdc	165,30
119	20813-24	Mortice solenoid bolt QUADRA MICRO - 24 Vdc	165,30
121	20813XS-12	Mortice solenoid bolt QUADRA MICRO - 12 Vdc	153,90
121	20813XS-24	Mortice solenoid bolt QUADRA MICRO - 24 Vdc	153,90
121	20813XSAM-12	Mortice solenoid bolt QUADRA MICRO - 12 Vdc	163,40
121	20813XSAM-24	Mortice solenoid bolt QUADRA MICRO - 24 Vdc	163,40
120	20910-12	Mortice solenoid bolt QUADRA MICRO - 12 Vdc	273,60
120	20910-24	Mortice solenoid bolt QUADRA MICRO - 24 Vdc	273,60
120	20910A-12	Mortice solenoid bolt QUADRA MICRO - 12 Vdc	273,60
120	20910A-24	Mortice solenoid bolt QUADRA MICRO - 24 Vdc	273,60
122	20910XS-12	Mortice solenoid bolt QUADRA MICRO - 12 Vdc	261,10
122	20910XS-24	Mortice solenoid bolt QUADRA MICRO - 24 Vdc	261,10
122	20910XSA-12	Mortice solenoid bolt QUADRA MICRO - 12 Vdc	261,10

Index

PAGE	ITEM	DESCRIPTION	€
122	20910XSA-24	Mortice solenoid bolt QUADRA MICRO - 24 Vdc	261,10
120	20911-12	Mortice solenoid bolt QUADRA MICRO - 12 Vdc	254,20
120	20911-24	Mortice solenoid bolt QUADRA MICRO - 24 Vdc	254,20
120	20911A-12	Mortice solenoid bolt QUADRA MICRO - 12 Vdc	254,20
120	20911A-24	Mortice solenoid bolt QUADRA MICRO - 24 Vdc	254,20
122	20911XS-12	Mortice solenoid bolt QUADRA MICRO - 12 Vdc	241,70
122	20911XS-24	Mortice solenoid bolt QUADRA MICRO - 24 Vdc	241,70
122	20911XSA-12	Mortice solenoid bolt QUADRA MICRO - 12 Vdc	241,70
122	20911XSA-24	Mortice solenoid bolt QUADRA MICRO - 24 Vdc	241,70
120	20913-12	Mortice solenoid bolt QUADRA MICRO - 12 Vdc	185,80
120	20913-24	Mortice solenoid bolt QUADRA MICRO - 24 Vdc	185,80
120	20913A-12	Mortice solenoid bolt QUADRA MICRO - 12 Vdc	185,80
120	20913A-24	Mortice solenoid bolt QUADRA MICRO - 24 Vdc	185,80
122	20913XS-12	Mortice solenoid bolt QUADRA MICRO - 12 Vdc	173,30
122	20913XS-24	Mortice solenoid bolt QUADRA MICRO - 24 Vdc	173,30
122	20913XSA-12	Mortice solenoid bolt QUADRA MICRO - 12 Vdc	173,30
122	20913XSA-24	Mortice solenoid bolt QUADRA MICRO - 24 Vdc	173,30
122	20913XSAM-12	Mortice solenoid bolt QUADRA MICRO - 12 Vdc	182,80
122	20913XSAM-24	Mortice solenoid bolt QUADRA MICRO - 24 Vdc	182,80
122	20913XSAAM-12	Mortice solenoid bolt QUADRA MICRO - 12 Vdc	182,80
122	20913XSAAM-24	Mortice solenoid bolt QUADRA MICRO - 24 Vdc	182,80
123	21610	Mortice solenoid bolt QUADRA - 12/24Vdc	254,20
123	21611	Mortice solenoid bolt QUADRA - 12/24Vdc	234,80
123	21612	Mortice solenoid bolt QUADRA - 12/24Vdc	342,00
123	21613	Mortice solenoid bolt QUADRA - 12/24Vdc	165,30
123	21613AM	Mortice solenoid bolt QUADRA - 12/24Vdc	174,80
126	21614	Mortice solenoid bolt QUADRA - 12/24Vdc	311,20
126	21614S	Mortice solenoid bolt QUADRA - 12/24Vdc	354,50
126	21615	Mortice solenoid bolt QUADRA - 12/24Vdc	291,80
126	21615S	Mortice solenoid bolt QUADRA - 12/24Vdc	335,20
126	21616	Mortice solenoid bolt QUADRA - 12/24Vdc	399,00
126	21616S	Mortice solenoid bolt QUADRA - 12/24Vdc	442,30
124	21810	Mortice solenoid bolt QUADRA - 12/24Vdc	254,20
124	21811	Mortice solenoid bolt QUADRA - 12/24Vdc	234,80
124	21812	Mortice solenoid bolt QUADRA - 12/24Vdc	342,00
124	21813	Mortice solenoid bolt QUADRA - 12/24Vdc	165,30
124	21813AM	Mortice solenoid bolt QUADRA - 12/24Vdc	174,80
127	21814	Mortice solenoid bolt QUADRA - 12/24Vdc	311,20
127	21814S	Mortice solenoid bolt QUADRA - 12/24Vdc	354,50
127	21815	Mortice solenoid bolt QUADRA - 12/24Vdc	291,80
127	21815S	Mortice solenoid bolt QUADRA - 12/24Vdc	335,20
127	21816	Mortice solenoid bolt QUADRA - 12/24Vdc	399,00
127	21816S	Mortice solenoid bolt QUADRA - 12/24Vdc	442,30
125	21910	Mortice solenoid bolt QUADRA - 12/24Vdc	273,60
125	21911	Mortice solenoid bolt QUADRA - 12/24Vdc	254,20
125	21913	Mortice solenoid bolt QUADRA - 12/24Vdc	185,80
125	21913AM	Mortice solenoid bolt QUADRA - 12/24Vdc	195,30
127	21914	Mortice solenoid bolt QUADRA - 12/24Vdc	330,60
127	21914S	Mortice solenoid bolt QUADRA - 12/24Vdc	373,90
127	21915	Mortice solenoid bolt QUADRA - 12/24Vdc	311,20
127	21915S	Mortice solenoid bolt QUADRA - 12/24Vdc	354,50

PAGE	ITEM	DESCRIPTION	€
134	22800M	Electric lock for cabinets	136,30
134	22800MBR	Electric lock for cabinets	177,80
135	22912	Security electric lock Arca Key series	310,60
136	22912A	Rotary motor lock without front plate	262,00
135	22912CS	Security electric lock Arca Key series	335,50
136	22912AF	Rotary motor lock with front plate	283,00
138	22922S	Security electric lock Arca Key series	310,00
138	22922SF	Security electric lock Arca Key series	326,00
135	22924	Security electric lock Arca Key series	310,60
135	22924CS	Security electric lock Arca Key series	335,50
138	22924S	Security electric lock Arca Key series	310,00
138	22924SF	Security electric lock Arca Key series	326,00
144	23000	Electric lock for swing doors	294,00
112	23500.20	electric lock series Gemina 12 Vac	270,40
112	23500.25	electric lock series Gemina 12V ac	270,40
112	23500.30	electric lock series Gemina 12 Vac	270,40
112	23500.35	electric lock series Gemina 12 Vac	270,40
112	23500.40	electric lock series Gemina 12 Vac	270,40
112	23500.50	electric lock series Gemina 12 Vac	270,40
112	23500.60	electric lock series Gemina 12 Vac	270,40
141	23622S	Electric lock for sliding doors - 12 Vdc	373,50
141	23622SCF	Electric lock for sliding doors - 12 Vdc	350,40
141	23624S	Electric lock for sliding doors - 24 Vdc	373,50
141	23624SCF	Electric lock for sliding doors - 24 Vdc	350,40
140	23800	Mechanical lock for sliding doors	249,00
140	23800FG	Mechanical lock for sliding doors	273,90
140	23822	Electric lock for sliding doors - 12 Vdc	348,60
140	23822CF	Electric lock for sliding doors - 12 Vdc	325,50
140	23822CFFG	Electric lock for sliding doors - 12 Vdc	350,40
140	23822FG	Electric lock for sliding doors - 12 Vdc	373,50
140	23824	Electric lock for sliding doors - 24 Vdc	348,60
140	23824CF	Electric lock for sliding doors - 24 Vdc	325,50
140	23824CFFG	Electric lock for sliding doors - 24 Vdc	350,40
140	23824FG	Electric lock for sliding doors - 24 Vdc	373,50
141	23822S	Electric lock for sliding doors - 12 Vdc	348,60
141	23822SCF	Electric lock for sliding doors - 12 Vdc	325,50
141	23824S	Electric lock for sliding doors - 24 Vdc	348,60
141	23824SCF	Electric lock for sliding doors - 24 Vdc	325,50
156	2460025	PRIMA series solenoid bolt - backset 25 mm	595,10
156	2460030	PRIMA series solenoid bolt - backset 30 mm	595,10
156	2460035	PRIMA series solenoid bolt - backset 35 mm	595,10
156	2460060	PRIMA series solenoid bolt - backset 60 mm	666,90
156	2460025SA	PRIMA series solenoid bolt - backset 25 mm	640,70
156	2460030SA	PRIMA series solenoid bolt - backset 30 mm	640,70
156	2460035SA	PRIMA series solenoid bolt - backset 35 mm	640,70
156	2460060SA	PRIMA series solenoid bolt - backset 60 mm	712,50
156	2460025XL	PRIMA series solenoid bolt - backset 25 mm	631,00
156	2460030XL	PRIMA series solenoid bolt - backset 30 mm	631,00
156	2460035XL	PRIMA series solenoid bolt - backset 35 mm	631,00
156	2460060XL	PRIMA series solenoid bolt - backset 60 mm	702,80
156	2460025SAXL	PRIMA series solenoid bolt - backset 25 mm	676,60

Index

PAGE	ITEM	DESCRIPTION	€
156	2460030SAXL	PRIMA series solenoid bolt - backset 30 mm	676,60
156	2460035SAXL	PRIMA series solenoid bolt - backset 35 mm	676,60
156	2460060SAXL	PRIMA series solenoid bolt - backset 60 mm	748,40
156	2460825	PRIMA series solenoid bolt - backset 25 mm	670,30
156	2460830	PRIMA series solenoid bolt - backset 30 mm	670,30
156	2460835	PRIMA series solenoid bolt - backset 35 mm	670,30
156	2460860	PRIMA series solenoid bolt - backset 60 mm	742,10
156	2460825SA	PRIMA series solenoid bolt - backset 25 mm	715,90
156	2460830SA	PRIMA series solenoid bolt - backset 30 mm	715,90
156	2460835SA	PRIMA series solenoid bolt - backset 35 mm	715,90
156	2460860SA	PRIMA series solenoid bolt - backset 60 mm	787,70
156	2460825XL	PRIMA series solenoid bolt - backset 25 mm	706,20
156	2460830XL	PRIMA series solenoid bolt - backset 30 mm	706,20
156	2460835XL	PRIMA series solenoid bolt - backset 35 mm	706,20
156	2460860XL	PRIMA series solenoid bolt - backset 60 mm	778,00
156	2460825SAXL	PRIMA series solenoid bolt - backset 25 mm	751,80
156	2460830SAXL	PRIMA series solenoid bolt - backset 30 mm	751,80
156	2460835SAXL	PRIMA series solenoid bolt - backset 35 mm	751,80
156	2460860SAXL	PRIMA series solenoid bolt - backset 60 mm	823,60
166	2462030	PRIMA MAXI Series solenoid bolt	736,40
166	2462830	PRIMA MAXI Series solenoid bolt	808,30
156	2480025	PRIMA series solenoid bolt - backset 25 mm	595,10
156	2480030	PRIMA series solenoid bolt - backset 30 mm	595,10
156	2480035	PRIMA series solenoid bolt - backset 35 mm	595,10
156	2480060	PRIMA series solenoid bolt - backset 60 mm	666,90
156	2480025SA	PRIMA series solenoid bolt - backset 25 mm	640,70
156	2480030SA	PRIMA series solenoid bolt - backset 30 mm	640,70
156	2480035SA	PRIMA series solenoid bolt - backset 35 mm	640,70
156	2480060SA	PRIMA series solenoid bolt - backset 60 mm	712,50
156	2480025XL	PRIMA series solenoid bolt - backset 25 mm	631,00
156	2480030XL	PRIMA series solenoid bolt - backset 30 mm	631,00
156	2480035XL	PRIMA series solenoid bolt - backset 35 mm	631,00
156	2480060XL	PRIMA series solenoid bolt - backset 60 mm	702,80
156	2480025SAXL	PRIMA series solenoid bolt - backset 25 mm	676,60
156	2480030SAXL	PRIMA series solenoid bolt - backset 30 mm	676,60
156	2480035SAXL	PRIMA series solenoid bolt - backset 35 mm	676,60
156	2480060SAXL	PRIMA series solenoid bolt - backset 60 mm	748,40
156	2480825	PRIMA series solenoid bolt - backset 25 mm	670,30
156	2480830	PRIMA series solenoid bolt - backset 30 mm	670,30
156	2480835	PRIMA series solenoid bolt - backset 35 mm	670,30
156	2480860	PRIMA series solenoid bolt - backset 60 mm	742,10
156	2480825SA	PRIMA series solenoid bolt - backset 25 mm	715,90
156	2480830SA	PRIMA series solenoid bolt - backset 30 mm	715,90
156	2480835SA	PRIMA series solenoid bolt - backset 35 mm	715,90
156	2480860SA	PRIMA series solenoid bolt - backset 60 mm	787,70
156	2480825XL	PRIMA series solenoid bolt - backset 25 mm	706,20
156	2480830XL	PRIMA series solenoid bolt - backset 30 mm	706,20
156	2480835XL	PRIMA series solenoid bolt - backset 35 mm	706,20
156	2480860XL	PRIMA series solenoid bolt - backset 60 mm	778,00
156	2480825SAXL	PRIMA series solenoid bolt - backset 25 mm	751,80
156	2480830SAXL	PRIMA series solenoid bolt - backset 30 mm	751,80

PAGE	ITEM	DESCRIPTION	€
156	2480835SAXL	PRIMA series solenoid bolt - backset 35 mm	751,80
156	2480860SAXL	PRIMA series solenoid bolt - backset 60 mm	823,60
166	2482030	PRIMA MAXI Series solenoid bolt	736,40
166	2482830	PRIMA MAXI Series solenoid bolt	808,30
194	25500.20	Electric lock Maxima Series - backset 20 mm	772,00
194	25500.25	Electric lock Maxima Series - backset 25 mm	772,00
194	25500.30	Electric lock Maxima Series - backset 30 mm	772,00
194	25500.35	Electric lock Maxima Series - backset 35 mm	772,00
194	25500.50	Electric lock Maxima Series - backset 50 mm	772,00
194	25511.20	Electric lock Maxima Series with pivoting hook - backset 20 mm	804,00
194	25511.25	Electric lock Maxima Series with pivoting hook - backset 25 mm	804,00
194	25511.30	Electric lock Maxima Series with pivoting hook - backset 30 mm	804,00
194	25511.35	Electric lock Maxima Series with pivoting hook - backset 35 mm	804,00
194	25511.50	Electric lock Maxima Series with pivoting hook - backset 50 mm	804,00
158	25600.25	PRIMA series solenoid bolt for single door - backset 25 mm	464,00
158	25600.30	PRIMA series solenoid bolt for single door - backset 30 mm	464,00
158	25600.35	PRIMA series solenoid bolt for single door - backset 35 mm	464,00
158	25600.60	PRIMA series solenoid bolt for single door - backset 60 mm	535,80
159	25600.25FL	PRIMA series, long front plate - backset 25 mm	475,40
159	25600.30FL	PRIMA series, long front plate - backset 30 mm	475,40
159	25600.35FL	PRIMA series, long front plate - backset 35 mm	475,40
159	25600.60FL	PRIMA series, long front plate - backset 60 mm	547,20
158	2560025SA	PRIMA series solenoid bolt for single door - backset 25 mm	509,60
158	2560030SA	PRIMA series solenoid bolt for single door - backset 30 mm	509,60
158	2560035SA	PRIMA series solenoid bolt for single door - backset 35 mm	509,60
158	2560060SA	PRIMA series solenoid bolt for single door - backset 60 mm	607,60
158	2560025XL	PRIMA series solenoid bolt for single door - backset 25 mm	499,90
158	2560030XL	PRIMA series solenoid bolt for single door - backset 30 mm	499,90
158	2560035XL	PRIMA series solenoid bolt for single door - backset 35 mm	499,90
158	2560060XL	PRIMA series solenoid bolt for single door - backset 60 mm	571,70
158	2560025SAXL	PRIMA series solenoid bolt for single door - backset 25 mm	545,50
158	2560030SAXL	PRIMA series solenoid bolt for single door - backset 30 mm	545,50
158	2560035SAXL	PRIMA series solenoid bolt for single door - backset 35 mm	545,50
158	2560060SAXL	PRIMA series solenoid bolt for single door - backset 60 mm	617,30
158	25608.25	PRIMA series solenoid bolt for single door - backset 25 mm	548,30
158	25608.30	PRIMA series solenoid bolt for single door - backset 30 mm	548,30
158	25608.35	PRIMA series solenoid bolt for single door - backset 35 mm	548,30
158	25608.60	PRIMA series solenoid bolt for single door - backset 60 mm	620,10
159	25608.25FL	PRIMA series, long front plate - backset 25 mm	559,70
159	25608.30FL	PRIMA series, long front plate - backset 30 mm	559,70
159	25608.35FL	PRIMA series, long front plate - backset 35 mm	559,70
159	25608.60FL	PRIMA series, long front plate - backset 60 mm	631,60
158	2560825SA	PRIMA series solenoid bolt for single door - backset 25 mm	593,90
158	2560830SA	PRIMA series solenoid bolt for single door - backset 30 mm	593,90
158	2560835SA	PRIMA series solenoid bolt for single door - backset 35 mm	593,90
158	2560860SA	PRIMA series solenoid bolt for single door - backset 60 mm	665,80
158	2560825XL	PRIMA series solenoid bolt for single door - backset 25 mm	584,20
158	2560830XL	PRIMA series solenoid bolt for single door - backset 30 mm	584,20
158	2560835XL	PRIMA series solenoid bolt for single door - backset 35 mm	584,20
158	2560860XL	PRIMA series solenoid bolt for single door - backset 60 mm	656,10
158	2560825SAXL	PRIMA series solenoid bolt for single door - backset 25 mm	629,80

Index

PAGE	ITEM	DESCRIPTION	€
158	2560830SAXL	PRIMA series solenoid bolt for single door - backset 30 mm	629,80
158	2560835SAXL	PRIMA series solenoid bolt for single door - backset 35 mm	629,80
158	2560860SAXL	PRIMA series solenoid bolt for single door - backset 60 mm	701,70
167	2562030	PRIMA series solenoid bolt Maxi for single door - backset 30 mm	622,40
167	2562830	PRIMA series solenoid bolt Maxi for single door - backset 30 mm	694,30
158	25800.25	PRIMA series solenoid bolt for single door - backset 25 mm	464,00
158	25800.30	PRIMA series solenoid bolt for single door - backset 30 mm	464,00
158	25800.35	PRIMA series solenoid bolt for single door - backset 35 mm	464,00
158	25800.60	PRIMA series solenoid bolt for single door - backset 60 mm	535,80
159	25800.25FL	PRIMA series solenoid bolt for single door - backset 25 mm	475,40
159	25800.30FL	PRIMA series solenoid bolt for single door - backset 30 mm	475,40
159	25800.35FL	PRIMA series solenoid bolt for single door - backset 35 mm	475,40
159	25800.60FL	PRIMA series solenoid bolt for single door - backset 60 mm	547,20
158	2580025SA	PRIMA series solenoid bolt for single door - backset 25 mm	509,60
158	2580030SA	PRIMA series solenoid bolt for single door - backset 30 mm	509,60
158	2580035SA	PRIMA series solenoid bolt for single door - backset 35 mm	509,60
158	2580060SA	PRIMA series solenoid bolt for single door - backset 60 mm	607,60
158	2580025XL	PRIMA series solenoid bolt for single door - backset 25 mm	499,90
158	2580030XL	PRIMA series solenoid bolt for single door - backset 30 mm	499,90
158	2580035XL	PRIMA series solenoid bolt for single door - backset 35 mm	499,90
158	2580060XL	PRIMA series solenoid bolt for single door - backset 60 mm	571,70
158	2580025SAXL	PRIMA series solenoid bolt for single door - backset 25 mm	545,50
158	2580030SAXL	PRIMA series solenoid bolt for single door - backset 30 mm	545,50
158	2580035SAXL	PRIMA series solenoid bolt for single door - backset 35 mm	545,50
158	2580060SAXL	PRIMA series solenoid bolt for single door - backset 60 mm	617,30
158	25808.25	PRIMA series solenoid bolt for single door - backset 25 mm	548,30
158	25808.30	PRIMA series solenoid bolt for single door - backset 30 mm	548,30
158	25808.35	PRIMA series solenoid bolt for single door - backset 35 mm	548,30
158	25808.60	PRIMA series solenoid bolt for single door - backset 60 mm	620,10
159	25808.25FL	PRIMA series solenoid bolt for single door - backset 25 mm	559,70
159	25808.30FL	PRIMA series solenoid bolt for single door - backset 30 mm	559,70
159	25808.35FL	PRIMA series solenoid bolt for single door - backset 35 mm	559,70
159	25808.60FL	PRIMA series solenoid bolt for single door - backset 60 mm	631,60
158	2580825SA	PRIMA series solenoid bolt for single door - backset 25 mm	593,90
158	2580830SA	PRIMA series solenoid bolt for single door - backset 30 mm	593,90
158	2580835SA	PRIMA series solenoid bolt for single door - backset 35 mm	593,90
158	2580860SA	PRIMA series solenoid bolt for single door - backset 60 mm	665,80
158	2580825XL	PRIMA series solenoid bolt for single door - backset 25 mm	584,20
158	2580830XL	PRIMA series solenoid bolt for single door - backset 30 mm	584,20
158	2580835XL	PRIMA series solenoid bolt for single door - backset 35 mm	584,20
158	2580860XL	PRIMA series solenoid bolt for single door - backset 60 mm	656,10
158	2580825SAXL	PRIMA series solenoid bolt for single door - backset 25 mm	629,80
158	2580830SAXL	PRIMA series solenoid bolt for single door - backset 30 mm	629,80
158	2580835SAXL	PRIMA series solenoid bolt for single door - backset 35 mm	629,80
158	2580860SAXL	PRIMA series solenoid bolt for single door - backset 60 mm	701,70
167	2582030	PRIMA series solenoid bolt Maxi for single door - backset 30 mm	622,40
167	2582830	PRIMA series solenoid bolt Maxi for single door - backset 30 mm	694,30
160	25900.25	PRIMA series solenoid bolt for single door with latch - backset 25 mm	464,00
160	25900.30	PRIMA series solenoid bolt for single door with latch - backset 30 mm	464,00
160	25900.35	PRIMA series solenoid bolt for single door with latch - backset 35 mm	464,00
160	25900.60	PRIMA series solenoid bolt for single door with latch - backset 60 mm	535,80

PAGE	ITEM	DESCRIPTION	€
160	2590025SA	PRIMA series solenoid bolt for single door with latch - backset 25 mm	509,60
160	2590030SA	PRIMA series solenoid bolt for single door with latch - backset 30 mm	509,60
160	2590035SA	PRIMA series solenoid bolt for single door with latch - backset 35 mm	509,60
160	2590060SA	PRIMA series solenoid bolt for single door with latch - backset 60 mm	581,40
160	25908.25	PRIMA series solenoid bolt for single door with latch - backset 25 mm	548,30
160	25908.30	PRIMA series solenoid bolt for single door with latch - backset 30 mm	548,30
160	25908.35	PRIMA series solenoid bolt for single door with latch - backset 35 mm	548,30
160	25908.60	PRIMA series solenoid bolt for single door with latch - backset 60 mm	620,10
160	2590825SA	PRIMA series solenoid bolt for single door with latch - backset 25 mm	593,90
160	2590830SA	PRIMA series solenoid bolt for single door with latch - backset 30 mm	593,90
160	2590835SA	PRIMA series solenoid bolt for single door with latch - backset 35 mm	593,90
160	2590860SA	PRIMA series solenoid bolt for single door with latch - backset 60 mm	665,70
161	25910.25	PRIMA series solenoid bolt for single door with latch - backset 25 mm	490,20
161	25910.30	PRIMA series solenoid bolt for single door with latch - backset 30 mm	490,20
161	25910.35	PRIMA series solenoid bolt for single door with latch - backset 35 mm	490,20
161	25910.60	PRIMA series solenoid bolt for single door with latch - backset 60 mm	562,00
161	2591025SA	PRIMA series solenoid bolt for single door with latch - backset 25 mm	535,80
161	2591030SA	PRIMA series solenoid bolt for single door with latch - backset 30 mm	535,80
161	2591035SA	PRIMA series solenoid bolt for single door with latch - backset 35 mm	535,80
161	2591060SA	PRIMA series solenoid bolt for single door with latch - backset 60 mm	607,60
161	25918.25	PRIMA series solenoid bolt for single door with latch - backset 25 mm	574,60
161	25918.30	PRIMA series solenoid bolt for single door with latch - backset 30 mm	574,60
161	25918.35	PRIMA series solenoid bolt for single door with latch - backset 35 mm	574,60
161	25918.60	PRIMA series solenoid bolt for single door with latch - backset 60 mm	646,40
161	2591825SA	PRIMA series solenoid bolt for single door with latch - backset 25 mm	620,20
161	2591830SA	PRIMA series solenoid bolt for single door with latch - backset 30 mm	620,20
161	2591835SA	PRIMA series solenoid bolt for single door with latch - backset 35 mm	620,20
161	2591860SA	PRIMA series solenoid bolt for single door with latch - backset 60 mm	692,00
160	25900.25C	PRIMA series solenoid bolt with latch - backset 25 mm - Chabbat version	475,40
160	25900.30C	PRIMA series solenoid bolt with latch - backset 30 mm - Chabbat version	475,40
160	25900.35C	PRIMA series solenoid bolt with latch - backset 35 mm - Chabbat version	475,40
160	25900.60C	PRIMA series solenoid bolt with latch - backset 60 mm - Chabbat version	547,20
160	25908.25C	PRIMA series solenoid bolt with latch - backset 25 mm - Chabbat version	559,70
160	25908.30C	PRIMA series solenoid bolt with latch - backset 30 mm - Chabbat version	559,70
160	25908.35C	PRIMA series solenoid bolt with latch - backset 35 mm - Chabbat version	559,70
160	25908.60C	PRIMA series solenoid bolt with latch - backset 60 mm - Chabbat version	631,60
161	25910.25C	PRIMA series solenoid bolt with latch - backset 25 mm - Chabbat version	501,60
161	25910.30C	PRIMA series solenoid bolt with latch - backset 30 mm - Chabbat version	501,60
161	25910.35C	PRIMA series solenoid bolt with latch - backset 35 mm - Chabbat version	501,60
161	25910.60C	PRIMA series solenoid bolt with latch - backset 60 mm - Chabbat version	573,40
161	25918.25C	PRIMA series solenoid bolt with latch - backset 25 mm - Chabbat version	586,00
161	25918.30C	PRIMA series solenoid bolt with latch - backset 30 mm - Chabbat version	586,00
161	25918.35C	PRIMA series solenoid bolt with latch - backset 35 mm - Chabbat version	586,00
161	25918.60C	PRIMA series solenoid bolt with latch - backset 60 mm - Chabbat version	657,80
174	26600	CLASSICA series solenoid bolt	595,10
174	26600SA	CLASSICA series solenoid bolt	640,70
174	26600XL	CLASSICA series solenoid bolt	631,00
174	26600SAXL	CLASSICA series solenoid bolt	676,60
174	26608	CLASSICA series solenoid bolt	670,30
174	26608SA	CLASSICA series solenoid bolt	715,90
174	26608XL	CLASSICA series solenoid bolt	706,20

Index

PAGE	ITEM	DESCRIPTION	€
174	26608SAXL	CLASSICA series solenoid bolt	751,80
174	26800	CLASSICA series solenoid bolt	595,10
174	26800SA	CLASSICA series solenoid bolt	640,70
174	26800XL	CLASSICA series solenoid bolt	631,00
174	26800SAXL	CLASSICA series solenoid bolt	676,60
174	26808	CLASSICA series solenoid bolt	670,30
174	26808SA	CLASSICA series solenoid bolt	715,90
174	26808XL	CLASSICA series solenoid bolt	706,20
174	26808SAXL	CLASSICA series solenoid bolt	751,80
175	27600	CLASSICA series solenoid bolt	464,00
175	27600SA	CLASSICA series solenoid bolt	509,60
175	27600XL	CLASSICA series solenoid bolt	499,90
175	27600SAXL	CLASSICA series solenoid bolt	545,50
175	27608	CLASSICA series solenoid bolt	548,30
175	27608SA	CLASSICA series solenoid bolt	593,90
175	27608XL	CLASSICA series solenoid bolt	584,20
175	27608SAXL	CLASSICA series solenoid bolt	629,80
175	27800	CLASSICA series solenoid bolt	464,00
175	27800SA	CLASSICA series solenoid bolt	509,60
175	27800XL	CLASSICA series solenoid bolt	499,90
175	27800SAXL	CLASSICA series solenoid bolt	545,50
175	27808	CLASSICA series solenoid bolt	548,30
175	27808SA	CLASSICA series solenoid bolt	593,90
175	27808XL	CLASSICA series solenoid bolt	584,20
175	27808SAXL	CLASSICA series solenoid bolt	629,80
176	27900	CLASSICA series solenoid bolt	464,00
176	27900SA	CLASSICA series solenoid bolt	509,60
176	27908	CLASSICA series solenoid bolt	548,30
176	27908SA	CLASSICA series solenoid bolt	593,90
182	28001.1	Electric lock for gates and doors - Right hand	454,10
182	28001.1DR	Electric lock for gates and doors - Right hand	479,00
182	28001.1DRM	Electric lock for gates and doors - Right hand	518,80
182	28001.1DRMN	Electric lock for gates and doors - Right hand	532,40
182	28001.1DRN	Electric lock for gates and doors - Right hand	492,60
182	28001.1DRNSC	Electric lock for gates and doors - Right hand	488,50
182	28001.1DRSC	Electric lock for gates and doors - Right hand	474,90
182	28001.1M	Electric lock for gates and doors - Right hand	493,90
182	28001.1MN	Electric lock for gates and doors - Right hand	507,50
182	28001.1MNSC	Electric lock for gates and doors - Right hand	503,40
182	28001.1MSC	Electric lock for gates and doors - Right hand	489,80
182	28001.1N	Electric lock for gates and doors - Right hand	467,70
182	28001.1NSC	Electric lock for gates and doors - Right hand	463,60
182	28001.1NXL	Electric lock for gates and doors - Right hand	493,70
182	28001.1NXXL	Electric lock for gates and doors - Right hand	498,50
182	28001.1SC	Electric lock for gates and doors - Right hand	450,00
182	28001.1XL	Electric lock for gates and doors - Right hand	480,10
182	28001.1XXL	Electric lock for gates and doors - Right hand	484,90
182	28001.2	Electric lock for gates and doors - Left hand	454,10
182	28001.2DR	Electric lock for gates and doors - Left hand	479,00
182	28001.2DRM	Electric lock for gates and doors - Left hand	518,80
182	28001.2DRMN	Electric lock for gates and doors - Left hand	532,40

PAGE	ITEM	DESCRIPTION	€
182	28001.2DRN	Electric lock for gates and doors - Left hand	492,60
182	28001.2DRNSC	Electric lock for gates and doors - Left hand	488,50
182	28001.2DRSC	Electric lock for gates and doors - Left hand	474,90
182	28001.2M	Electric lock for gates and doors - Left hand	493,90
182	28001.2MN	Electric lock for gates and doors - Left hand	507,50
182	28001.2MNSC	Electric lock for gates and doors - Left hand	503,40
182	28001.2MSC	Electric lock for gates and doors - Left hand	489,80
182	28001.2N	Electric lock for gates and doors - Left hand	467,70
182	28001.2NSC	Electric lock for gates and doors - Left hand	463,60
182	28001.2NXL	Electric lock for gates and doors - Left hand	493,70
182	28001.2NXXL	Electric lock for gates and doors - Left hand	498,50
182	28001.2SC	Electric lock for gates and doors - Left hand	450,00
182	28001.2XL	Electric lock for gates and doors - Left hand	480,10
182	28001.2XXL	Electric lock for gates and doors - Left hand	484,90
182	28002.1	Electric lock for gates and doors with internal knob - Right hand	479,00
182	28002.1M	Electric lock for gates and doors with internal knob - Right hand	518,80
182	28002.1MP	Electric lock for gates and doors with internal knob - Right hand	532,40
182	28002.1MN	Electric lock for gates and doors with internal knob - Right hand	532,40
182	28002.1MNP	Electric lock for gates and doors with internal knob - Right hand	546,00
182	28002.1MNSC	Electric lock for gates and doors with internal knob - Right hand	528,30
182	28002.1MSC	Electric lock for gates and doors with internal knob - Right hand	514,70
182	28002.1MPSC	Electric lock for gates and doors with internal knob - Right hand	528,30
182	28002.1N	Electric lock for gates and doors with internal knob - Right hand	492,60
182	28002.1NP	Electric lock for gates and doors with internal knob - Right hand	506,30
182	28002.1NSC	Electric lock for gates and doors with internal knob - Right hand	488,50
182	28002.1NXL	Electric lock for gates and doors with internal knob - Right hand	518,60
182	28002.1NXXL	Electric lock for gates and doors with internal knob - Right hand	523,40
182	28002.1P	Electric lock for gates and doors with internal knob - Right hand	492,60
182	28002.1SC	Electric lock for gates and doors with internal knob - Right hand	474,90
182	28002.1XL	Electric lock for gates and doors with internal knob - Right hand	505,00
182	28002.1XXL	Electric lock for gates and doors with internal knob - Right hand	509,80
182	28002.2	Electric lock for gates and doors with internal knob - Left hand	479,00
182	28002.2M	Electric lock for gates and doors with internal knob - Left hand	518,80
182	28002.2MP	Electric lock for gates and doors with internal knob - Left hand	532,40
182	28002.2MN	Electric lock for gates and doors with internal knob - Left hand	532,40
182	28002.2MNP	Electric lock for gates and doors with internal knob - Left hand	546,00
182	28002.2MNSC	Electric lock for gates and doors with internal knob - Left hand	528,30
182	28002.2MSC	Electric lock for gates and doors with internal knob - Left hand	514,70
182	28002.2MPSC	Electric lock for gates and doors with internal knob - Left hand	528,30
182	28002.2N	Electric lock for gates and doors with internal knob - Left hand	492,60
182	28002.2NP	Electric lock for gates and doors with internal knob - Left hand	506,30
182	28002.2NSC	Electric lock for gates and doors with internal knob - Left hand	488,50
182	28002.2NXL	Electric lock for gates and doors with internal knob - Left hand	518,60
182	28002.2NXXL	Electric lock for gates and doors with internal knob - Left hand	523,40
182	28002.2P	Electric lock for gates and doors with internal knob - Left hand	492,60
182	28002.2SC	Electric lock for gates and doors with internal knob - Left hand	474,90
182	28002.2XL	Electric lock for gates and doors with internal knob - Left hand	505,00
182	28002.2XXL	Electric lock for gates and doors with internal knob - Left hand	509,80
182	28003.1	Electric lock for gates and doors - Right hand	467,10
182	28003.1DR	Electric lock for gates and doors - Right hand	492,00
182	28003.1DRM	Electric lock for gates and doors - Right hand	530,90

Index

PAGE	ITEM	DESCRIPTION	€
182	28003.1DRMN	Electric lock for gates and doors - Right hand	544,50
182	28003.1DRN	Electric lock for gates and doors - Right hand	505,60
182	28003.1DRNSC	Electric lock for gates and doors - Right hand	501,50
182	28003.1DRSC	Electric lock for gates and doors - Right hand	487,90
182	28003.1M	Electric lock for gates and doors - Right hand	506,90
182	28003.1MN	Electric lock for gates and doors - Right hand	520,50
182	28003.1MNSC	Electric lock for gates and doors - Right hand	516,40
182	28003.1MSC	Electric lock for gates and doors - Right hand	502,80
182	28003.1N	Electric lock for gates and doors - Right hand	480,70
182	28003.1NSC	Electric lock for gates and doors - Right hand	476,60
182	28003.1NXL	Electric lock for gates and doors - Right hand	506,70
182	28003.1NXXL	Electric lock for gates and doors - Right hand	511,50
182	28003.1SC	Electric lock for gates and doors - Right hand	463,00
182	28003.1XL	Electric lock for gates and doors - Right hand	493,10
182	28003.1XXL	Electric lock for gates and doors - Right hand	497,90
182	28003.2	Electric lock for gates and doors - Left hand	467,10
182	28003.2DR	Electric lock for gates and doors - Left hand	492,00
182	28003.2DRM	Electric lock for gates and doors - Left hand	530,90
182	28003.2DRMN	Electric lock for gates and doors - Left hand	544,50
182	28003.2DRN	Electric lock for gates and doors - Left hand	505,60
182	28003.2DRNSC	Electric lock for gates and doors - Left hand	501,50
182	28003.2DRSC	Electric lock for gates and doors - Left hand	487,90
182	28003.2M	Electric lock for gates and doors - Left hand	506,90
182	28003.2MN	Electric lock for gates and doors - Left hand	520,50
182	28003.2MNSC	Electric lock for gates and doors - Left hand	516,40
182	28003.2MSC	Electric lock for gates and doors - Left hand	502,80
182	28003.2N	Electric lock for gates and doors - Left hand	480,70
182	28003.2NSC	Electric lock for gates and doors - Left hand	476,60
182	28003.2NXL	Electric lock for gates and doors - Left hand	506,70
182	28003.2NXXL	Electric lock for gates and doors - Left hand	511,50
182	28003.2SC	Electric lock for gates and doors - Left hand	463,00
182	28003.2XL	Electric lock for gates and doors - Left hand	493,10
182	28003.2XXL	Electric lock for gates and doors - Left hand	497,90
184	28700	Rim deadbolt for gates and garage doors - Fail secure - Stainless steel	500,30
184	28700N	Rim deadbolt for gates and garage doors - Fail secure - Black painted	470,00
184	28700NVR	Rim deadbolt for gates and garage doors - Fail secure - Black painted	500,30
184	28700VR	Rim deadbolt for gates and garage doors - Fail secure - Stainless steel	500,30
184	28710	Rim deadbolt for gates and garage doors - Fail safe - Stainless steel	520,50
184	28710N	Rim deadbolt for gates and garage doors - Fail safe - Black painted	490,00
186	28720	LEGION motor deadbolt	580,90
186	28720N	LEGION motor deadbolt	580,90
188	28800	GATE BOLT rim deadbolt for gates	520,50
188	28800MIC	GATE BOLT rim deadbolt for gates	630,00
188	28800OR	GATE BOLT rim deadbolt for gates	520,50
188	28800ORMIC	GATE BOLT rim deadbolt for gates	630,00
188	28800LC	GATE BOLT rim deadbolt for gates	337,90
188	28800LCMIC	GATE BOLT rim deadbolt for gates	447,40
188	28800LCMICW	GATE BOLT rim deadbolt for gates	500,40
188	28800LCOR	GATE BOLT rim deadbolt for gates	337,90
188	28800LCORMIC	GATE BOLT rim deadbolt for gates	448,20
188	28800LCORW	GATE BOLT rim deadbolt for gates	390,10

PAGE	ITEM	DESCRIPTION	€
188	28800LCW	GATE BOLT rim deadbolt for gates	390,10
94	31012	Mortice electric strike Omnia Micro series	36,20
95	31012DCF	Mortice electric strike Omnia Micro series	96,00
95	31012DCPN	Mortice electric strike Omnia Micro series	89,60
95	31012TD	Mortice electric strike Omnia Micro series	93,70
94	31012UNI	Mortice electric strike Omnia Micro series	43,60
94	31024DC	Mortice electric strike Omnia Micro series	42,30
94	31112	Mortice electric strike Omnia Micro series	39,80
95	31112TD	Mortice electric strike Omnia Micro series	97,20
94	31112UNI	Mortice electric strike Omnia Micro series	46,10
94	31124DC	Mortice electric strike Omnia Micro series	46,20
94	31212L	Mortice electric strike Omnia Micro series	41,10
94	31212L UNI	Mortice electric strike Omnia Micro series	47,30
94	31224DC	Mortice electric strike Omnia Micro series	46,20
94	31224LDC	Mortice electric strike Omnia Micro series	47,40
94	31312L	Mortice electric strike Omnia Micro series	43,60
94	31312L UNI	Mortice electric strike Omnia Micro series	49,80
94	31324LDC	Mortice electric strike Omnia Micro series	49,80
94	31412A	Mortice electric strike Omnia Micro series	46,10
95	31412FTA	Mortice electric strike Omnia Micro series	52,20
94	31512A	Mortice electric strike Omnia Micro series	54,30
95	31812	Mortice electric strike Omnia Micro series	98,40
95	31824	Mortice electric strike Omnia Micro series	98,40
96	32012	Mortice electric strike Omnia Radial series	41,10
97	32012PLA	Mortice electric strike Omnia Radial series	86,50
96	32112	Mortice electric strike Omnia Radial series	43,60
97	32112PLA	Mortice electric strike Omnia Radial series	90,10
96	32212	Mortice electric strike Omnia Radial series	43,60
97	32212PLA	Mortice electric strike Omnia Radial series	93,70
96	32312	Mortice electric strike Omnia Radial series	46,10
97	32312PLA	Mortice electric strike Omnia Radial series	97,20
96	32812	Mortice electric strike Omnia Radial series	98,40
96	32824	Mortice electric strike Omnia Radial series	98,40
98	34602A	Mortice electric strike Omnia 1000 series	168,40
98	34604A	Mortice electric strike Omnia 1000 series	168,40
98	34622	Mortice electric strike Omnia 1000 series	168,40
98	34624	Mortice electric strike Omnia 1000 series	168,40
98	34802A	Mortice electric strike Omnia 1000 series	199,20
98	34804A	Mortice electric strike Omnia 1000 series	199,20
98	34822	Mortice electric strike Omnia 1000 series	199,20
98	34824	Mortice electric strike Omnia 1000 series	199,20
96	35412	Mortice electric strike Omnia Radial series	44,80
96	35512	Mortice electric strike Omnia Radial series	47,30
99	36012B	Electric strike for panic exit devices Omnia Exit series	164,30
99	36012BCR	Electric strike for panic exit devices Omnia Exit series	179,10
99	36012BM	Electric strike for panic exit devices Omnia Exit series	222,90
99	36012BMCR	Electric strike for panic exit devices Omnia Exit series	237,70
99	36012C	Electric strike for panic exit devices Omnia Exit series	106,70
99	36012CCR	Electric strike for panic exit devices Omnia Exit series	121,50
99	36412B	Electric strike for panic exit devices Omnia Exit series	174,30
99	36412BCR	Electric strike for panic exit devices Omnia Exit series	189,10

Index

PAGE	ITEM	DESCRIPTION	€
99	36412C	Electric strike for panic exit devices Omnia Exit series	118,60
99	36412CCR	Electric strike for panic exit devices Omnia Exit series	133,40
99	36612B	Electric strike for panic exit devices Omnia Exit series	176,70
99	36612BCR	Electric strike for panic exit devices Omnia Exit series	191,50
99	36612BM	Electric strike for panic exit devices Omnia Exit series	232,40
99	36612BMCR	Electric strike for panic exit devices Omnia Exit series	247,20
99	36624B	Electric strike for panic exit devices Omnia Exit series	181,40
99	36624BCR	Electric strike for panic exit devices Omnia Exit series	196,20
99	36624BM	Electric strike for panic exit devices Omnia Exit series	237,10
99	36624BMCR	Electric strike for panic exit devices Omnia Exit series	251,90
99	36812B	Electric strike for panic exit devices Omnia Exit series	212,20
99	36812BCR	Electric strike for panic exit devices Omnia Exit series	227,00
99	36812BM	Electric strike for panic exit devices Omnia Exit series	267,90
99	36812BMCR	Electric strike for panic exit devices Omnia Exit series	282,70
99	36824B	Electric strike for panic exit devices Omnia Exit series	217,00
99	36824BCR	Electric strike for panic exit devices Omnia Exit series	231,80
99	36824BM	Electric strike for panic exit devices Omnia Exit series	273,90
99	36824BMCR	Electric strike for panic exit devices Omnia Exit series	288,70
100	37012.1A	Mortice electric strike for armoured doors series Blindo 700	82,20
100	37012.2A	Mortice electric strike for armoured doors series Blindo 700	82,20
100	37012.1PLA	Mortice electric strike for armoured doors series Blindo 700	135,00
100	37012.2PLA	Mortice electric strike for armoured doors series Blindo 700	135,00
100	37212.1A	Mortice electric strike for armoured doors series Blindo 700	64,70
100	37212.2A	Mortice electric strike for armoured doors series Blindo 700	64,70
100	37212.1PLA	Mortice electric strike for armoured doors series Blindo 700	125,00
100	37212.2PLA	Mortice electric strike for armoured doors series Blindo 700	125,00
100	37312.1A	Mortice electric strike for armoured doors series Blindo 700	68,50
100	37312.2A	Mortice electric strike for armoured doors series Blindo 700	68,50
100	37412.1A	Mortice electric strike for armoured doors series Blindo 700	64,70
100	37412.2A	Mortice electric strike for armoured doors series Blindo 700	64,70
100	37512.1A	Mortice electric strike for armoured doors series Blindo 700	68,50
100	37512.2A	Mortice electric strike for armoured doors series Blindo 700	68,50
100	37612.1A	Mortice electric strike for armoured doors series Blindo 700	122,10
100	37612.2A	Mortice electric strike for armoured doors series Blindo 700	122,10
100	37624.1A	Mortice electric strike for armoured doors series Blindo 700	122,10
100	37624.2A	Mortice electric strike for armoured doors series Blindo 700	122,10
100	37812.1A	Mortice electric strike for armoured doors series Blindo 700	122,10
100	37812.2A	Mortice electric strike for armoured doors series Blindo 700	122,10
100	37824.1A	Mortice electric strike for armoured doors series Blindo 700	122,10
100	37824.2A	Mortice electric strike for armoured doors series Blindo 700	122,10
101	38012.1A	Mortice electric strike for outside mounting series Blindo 1.000	102,00
101	38012.2A	Mortice electric strike for outside mounting series Blindo 1.000	102,00
101	38412.1A	Mortice electric strike for outside mounting series Blindo 1.000	109,50
101	38412.2A	Mortice electric strike for outside mounting series Blindo 1.000	109,50
101	38612.1A	Mortice electric strike for outside mounting series Blindo 1.000	144,60
101	38612.2A	Mortice electric strike for outside mounting series Blindo 1.000	144,60
101	38624.1A	Mortice electric strike for outside mounting series Blindo 1.000	144,60
101	38624.2A	Mortice electric strike for outside mounting series Blindo 1.000	144,60
101	38812.1A	Mortice electric strike for outside mounting series Blindo 1.000	173,10
101	38812.2A	Mortice electric strike for outside mounting series Blindo 1.000	173,10
101	38824.1A	Mortice electric strike for outside mounting series Blindo 1.000	173,10

PAGE	ITEM	DESCRIPTION	€
101	38824.2A	Mortice electric strike for outside mounting series Blindo 1.000	173,10
102	39012A	Electric strike for glazed doors Omnia Glass series	228,80
102	39812A	Electric strike for glazed doors Omnia Glass series	256,10
84	40610	Smart Trim electric handle - satin chrome finish	471,60
84	40610B	Smart Trim electric handle - white color	457,30
85	40610BDM	Smart Trim electric handle - white color	538,70
84	40610BMEC	Smart Trim electric handle - white color	265,70
85	40610DM	Smart Trim electric handle - satin chrome finish	553,00
84	40610MEC	Smart Trim electric handle - satin chrome finish - meccanica	280,00
84	40610N	Smart Trim electric handle - black color	457,30
85	40610NDM	Smart Trim electric handle - black color	538,70
84	40610NMEC	Smart Trim electric handle - black color - mechanical version	265,70
84	40611	Smart Trim electric handle - satin chrome finish	549,40
84	40611B	Smart Trim electric handle - white color	535,10
85	40611BDM	Smart Trim electric handle - white color	616,50
85	40611DM	Smart Trim electric handle - satin chrome finish	630,80
84	40611N	Smart Trim electric handle - black color	535,10
85	40611NDM	Smart Trim electric handle - black color	616,50
86	40620	Smart Trim electric handle - satin chrome finish	548,20
86	40620B	Smart Trim electric handle - white color	535,10
86	40620BMEC	Smart Trim electric handle - white color	343,50
86	40620MEC	Smart Trim electric handle - satin chrome finish - mechanical version	356,70
86	40620N	Smart Trim electric handle - black color	535,10
86	40620NMEC	Smart Trim electric handle - black color - mechanical version	343,50
86	40621	Smart Trim electric handle - satin chrome finish	615,30
86	40621B	Smart Trim electric handle - white color	603,30
86	40621N	Smart Trim electric handle - black color	603,30
84	40810	Smart Trim electric handle - satin chrome finish	471,60
84	40810B	Smart Trim electric handle - white color	457,30
85	40810BDM	Smart Trim electric handle - white color	538,70
85	40810DM	Smart Trim electric handle - satin chrome finish	553,00
84	40810N	Smart Trim electric handle - black color	457,30
85	40810NDM	Smart Trim electric handle - black color	538,70
84	40811	Smart Trim electric handle - satin chrome finish	549,40
84	40811B	Smart Trim electric handle - white color	535,10
85	40811BDM	Smart Trim electric handle - white color	616,50
85	40811DM	Smart Trim electric handle - satin chrome finish	630,80
84	40811N	Smart Trim electric handle - black color	535,10
85	40811NDM	Smart Trim electric handle - black color	616,50
86	40820	Smart Trim electric handle - satin chrome finish	548,20
86	40820B	Smart Trim electric handle - white color	535,10
86	40820N	Smart Trim electric handle - black color	535,10
86	40821	Smart Trim electric handle - satin chrome finish	615,30
86	40821B	Smart Trim electric handle - white color	603,30
86	40821N	Smart Trim electric handle - black color	603,30
199	44000	Push bar microswitch	187,30
57	51300	Time delay circuit	72,30
57	51400	Time delay circuit	171,90
57	51500	Time delay circuit	72,30
77	52002	Single zone fire alarm	314,80
199	53500	Sensitive card	232,40

Index

PAGE	ITEM	DESCRIPTION	€
199	53501	Sensitive card with front plate	260,80
175	OP54036	Horizontal solenoid bolt	612,20
175	OP54038	Horizontal solenoid bolt	612,20
176	OP54039.1	Horizontal solenoid bolt	612,20
176	OP54039.2	Horizontal solenoid bolt	612,20
196	54250	Electronica board fo MAXIMA lock - single door	354,50
196	54255	Electronica board fo MAXIMA lock - double door	841,80
145	54610A	Micro-processor electronic board	260,00
58/146	54611A	Desktop console - 1 door	430,40
58/146	54612A	Desktop console - 2 doors	465,90
146	54613A	Desktop console - 3 doors	897,50
146	54614A	Desktop console - 4 doors	930,70
147	54614B	Desktop console - 4 doors	460,00
148	54615B	Auxiliary circuit	140,00
148	54616B	Master circuit	148,00
148	54617B	Battery Back-Up circuit	108,00
58	55001	Exit system board	610,60
59	55003	Magnetic lock with housed in electronic	946,10
61	55005	Alarm system	269,10
204	55010	Indicator lamp Red / Green	117,40
204	55010BR	Indicator lamp Red / Green	117,40
204	55010N	Indicator lamp Red / Green	117,40
195	OP55011.50	Electric lock Maxima - backset 50 mm - Replacement for 55011 Corni	884,00
204	55011	Indicator lamp Red / Green with push button	142,30
204	55011BR	Indicator lamp Red / Green with push button	142,30
204	55011N	Indicator lamp Red / Green with push button	142,30
204	55012	Indicator lamp Red / Green with push button and porter	198,00
204	55012BR	Indicator lamp Red / Green with push button and porter	198,00
204	55012N	Indicator lamp Red / Green with push button and porter	198,00
205	55013	External porter	142,30
205	55013BR	External porter	142,30
205	55013N	External porter	142,30
210	55017	Push button - disabled person	91,30
210	55017N	Push button - disabled person	91,30
210	55017V	Push button - disabled person	91,30
210	55017VN	Push button - disabled person	91,30
210	55020	Push to exit button	80,60
210	55020EX	Push to exit button	80,60
210	55020NT	Push to exit button	80,60
210	55021	Push to exit button	80,60
210	55023	Push to exit button	90,10
206	55030	Indicator lamp red / green - S.a.a front plate	123,30
206	55030BR	Indicator lamp red / green - Bronze front plate	123,30
206	55030N	Indicator lamp red / green - Black front plate	123,30
206	55031	Indicator lamp red / green with push button - S.a.a front plate	149,40
206	55031BR	Indicator lamp red / green with push button - Bronze front plate	149,40
206	55031N	Indicator lamp red / green with push button - Black anodized front plate	149,40
206	55033	Porter with S.a.a front plate	149,40
206	55033BR	Porter with Bronze front plate	149,40
206	55033N	Porter with Black front plate	149,40
164	OP55036.25	PRIMA series solenoid bolt OP - backset 25 mm	498,20

PAGE	ITEM	DESCRIPTION	€
164	OP55036.30	PRIMA series solenoid bolt OP - backset 30 mm	498,20
164	OP55036.35	PRIMA series solenoid bolt OP - backset 35 mm	498,20
164	OP55038.25	PRIMA series solenoid bolt OP - backset 25 mm	498,20
164	OP55038.30	PRIMA series solenoid bolt OP - backset 30 mm	498,20
164	OP55038.35	PRIMA series solenoid bolt OP - backset 35 mm	498,20
165	OP55039.1.25	PRIMA series solenoid bolt OP - backset 25 mm - Right hand	498,20
165	OP55039.2.25	PRIMA series solenoid bolt OP - backset 25 mm - Left hand	498,20
165	OP55039.1.30	PRIMA series solenoid bolt OP - backset 30 mm - Right hand	498,20
165	OP55039.2.30	PRIMA series solenoid bolt OP - backset 30 mm - Left hand	498,20
165	OP55039.1.35	PRIMA series solenoid bolt OP - backset 35 mm - Right hand	498,20
165	OP55039.2.35	PRIMA series solenoid bolt OP - backset 35 mm - Left hand	498,20
165	OP5503910.1.25	PRIMA series solenoid bolt OP - backset 25 mm - Right hand	525,50
165	OP5503910.2.25	PRIMA series solenoid bolt OP - backset 25 mm - Left hand	525,50
165	OP5503910.1.30	PRIMA series solenoid bolt OP - backset 30 mm - Right hand	525,50
165	OP5503910.2.30	PRIMA series solenoid bolt OP - backset 30 mm - Left hand	525,50
165	OP5503910.1.35	PRIMA series solenoid bolt OP - backset 35 mm - Right hand	525,50
165	OP5503910.2.35	PRIMA series solenoid bolt OP - backset 35 mm - Left hand	525,50
212	55040	Cylinder bracket with micro-switch	39,10
212	55040N	Cylinder bracket with micro-switch	39,10
212	55041	Cylinder bracket with micro-switch	87,70
213	55042FC	Cylinder bracket with micro-switch	94,80
213	55042FL	Cylinder bracket with micro-switch	94,80
213	55043FC	Cylinder bracket with micro-switch	106,70
213	55043FL	Cylinder bracket with micro-switch	106,70
220	55414	Radio receiver	106,70
220	55416	Radio receiver	97,20
220	55417	Radio receiver	84,70
220	55418	Radio receiver	84,70
221	55420	Radio command transmitter	49,80
221	55420RC	Radio command transmitter	56,90
221	55421	Radio command transmitter	54,50
221	55421RC	Radio command transmitter	61,70
265	55512	Card reader	160,10
265	55512MF	Card reader	170,00
228	55611NET	Multilink electronic	486,10
233	55612	Code keypad	195,60
233	55612CR	Code keypad	195,60
233	55612PD	Code keypad	308,30
233	55612PDC	Code keypad	272,70
233	55612PDN	Code keypad	320,10
233	55612PDCN	Code keypad	284,50
233	55612SS	Code keypad	296,40
233	55612SSD	Code keypad	373,50
234	55613A	Card reader	224,10
234	55613AAL	Card reader	254,90
229	55613NET	Card reader	332,00
234	55614	Card reader	162,40
229	55614NET	Card reader	367,50
234	55614SC	Card reader	162,40
235	55614PD	Card reader	149,40
235	55614PDN	Card reader	149,40

Index

PAGE	ITEM	DESCRIPTION	€
237	55615	Magneti card	5,20
237	55615SLA	Magneti card	7,40
237	55615SLB	Magneti card	9,10
229	55616NET	Converter USB / RS485	225,30
229	55618NET	Converter TTL/ RS485	59,30
235	55618PD	Dallas reader	155,30
235	55618PDN	Dallas reader	155,30
230	55622NET	Software for Multilink Net	355,70
240	55640SE	Electronic for ATM card reader	426,00
242	55641A	Insertable card reader for debit and credit cards	640,00
242	55641B	Insertable card reader for debit and credit cards	520,00
242	55641C	Insertable card reader for debit and credit cards	520,00
243	55641D	Insertable card reader for debit and credit cards	245,00
243	55641E	Insertable card reader for debit and credit cards	495,00
243	55641F	Insertable card reader for debit and credit cards	520,00
243	55641G	Push button	84,00
241	55642SE	Card reader for debit and credit cards	345,00
232	56611A	Minilink control unit	189,10
237/246	56616	Card size transponder	5,20
237/265	56616MF	Card size transponder	6,50
265	56616MFSLA	Card size transponder	8,70
265	56616MFSLB	Card size transponder	10,40
237/246	56616SLA	Card size transponder	7,40
237/246	56616SLB	Card size transponder	9,10
237/246	56616T	Keychain transponder	8,10
237/246	56616W	Bracelet size transponder	21,80
159	OP57036.25	PRIMA series solenoid bolt OP - Replacement for Corni series 570 - backset 25 mm	612,20
159	OP57036.30	PRIMA series solenoid bolt OP - Replacement for Corni series 570 - backset 30 mm	612,20
159	OP57036.35	PRIMA series solenoid bolt OP - Replacement for Corni series 570 - backset 35 mm	612,20
159	OP57038.25	PRIMA series solenoid bolt OP - Replacement for Corni series 570 - backset 25 mm	612,20
159	OP57038.30	PRIMA series solenoid bolt OP - Replacement for Corni series 570 - backset 30 mm	612,20
159	OP57038.35	PRIMA series solenoid bolt OP - Replacement for Corni series 570 - backset 35 mm	612,20
246	57301	Keypad	355,70
248	57312	Keypad	320,10
248	57312N	Keypad	332,00
248	57313	Keypad	284,50
248	57313N	Keypad	296,40
256	57501	Keypad	415,00
256	57501RF-868	Keypad	533,50
257	57512RF-868	Keypad	213,40
257	57512SRF-868	Keypad	367,50
257	57513NRF-868	Keypad	367,50
257	57513RF-868	Keypad	367,50
258	57515RF-868	Radio repeater	177,80
258	57516RF-868	Radio relay module	177,80
258	57517	Antenna	59,30
258	57518	Modem GSM	498,00
222	57520RF	Radio module transmitter - 4 channels - Lo.Ra.	119,60
222	57521RF	Radio module receiver - 4 channels - Lo.Ra.	166,90
260	57522	Software for GSM	237,10
262	57530A	Energy saving control unit	143,50

PAGE	ITEM	DESCRIPTION	€
262	57530ARF	Energy saving control unit	239,20
262	57532ARF	Radio magnetic sensor 868 MHz	99,80
262	57532ABRF	Radio magnetic sensor 868 MHz	99,80
263	57533A	Presence detector wire connection	71,60
263	57533ARF	Presence detector wire connection	95,40
263	57534A	Presence detector wire connection	71,60
263	57534ARF	Radio presence detector 868 MHz	95,40
238	57700	Digital Door Viewer - 3,2''	112,60
238	57700GD	Digital Door Viewer, gold finish - 3,2''	112,60
238	57701	Digital Door Viewer, silver finish - 4.0''	136,30
238	57701GD	Digital Door Viewer, gold finish - 4.0''	136,30
249	58000	Touch Key Reader	199,20
249	58000N	Touch Key Reader	199,20
249	58013	Supplementary reader	70,00
249	58013N	Supplementary reader	70,00
237/249	58015	Touch Key Dallas color black	13,00
237/249	58015G	Touch Key Dallas color yellow	14,20
237/249	58015R	Touch Key Dallas color red	14,20
237/249	58015V	Touch Key Dallas color green	14,20
236	58018ML	Dallas reader for external use	143,50
236	58018MLN	Dallas reader for external use	143,50
250	58200SA	Biometric reader	675,80
270	59001	People Counter	398,40
270	59001RF	People Counter	486,10
270	59002	People Counter	597,50
270	59002RF	People Counter	685,30
273	59013	Mini Counter People	308,30
74	60000	Oil brake for sliding doors	358,10
74	60000VLC	Oil brake for sliding doors - version with vulkillan wheel for steel cable	370,00
74	60001	Oil brake for sliding doors - 3 pulley version	380,60
75	65000	Hydraulic dampers for fire resistant sliding doors	129,20
75	65001	Hydraulic dampers for fire resistant sliding doors	194,40
160	CC090	Connector for solenoid bolts	14,90
160	CC091	Connector for solenoid bolts	19,90
146/215	REL12V	Relay 12V	42,70
146/215	REL24V	Relay 24V	42,70

SAFETY

- SECURITY ELECTROMAGNETS
- IDEAL FOR EMERGENCY EXITS AND CONDOMINIUM ENTRY DOORS
- SILENT AND RESISTANT
- HOLDING FORCE FROM 150 TO 1500 KG
- CAN BE APPLIED ON PRE-EXISTING DOORS

SAFETY

www.opera-italy.com

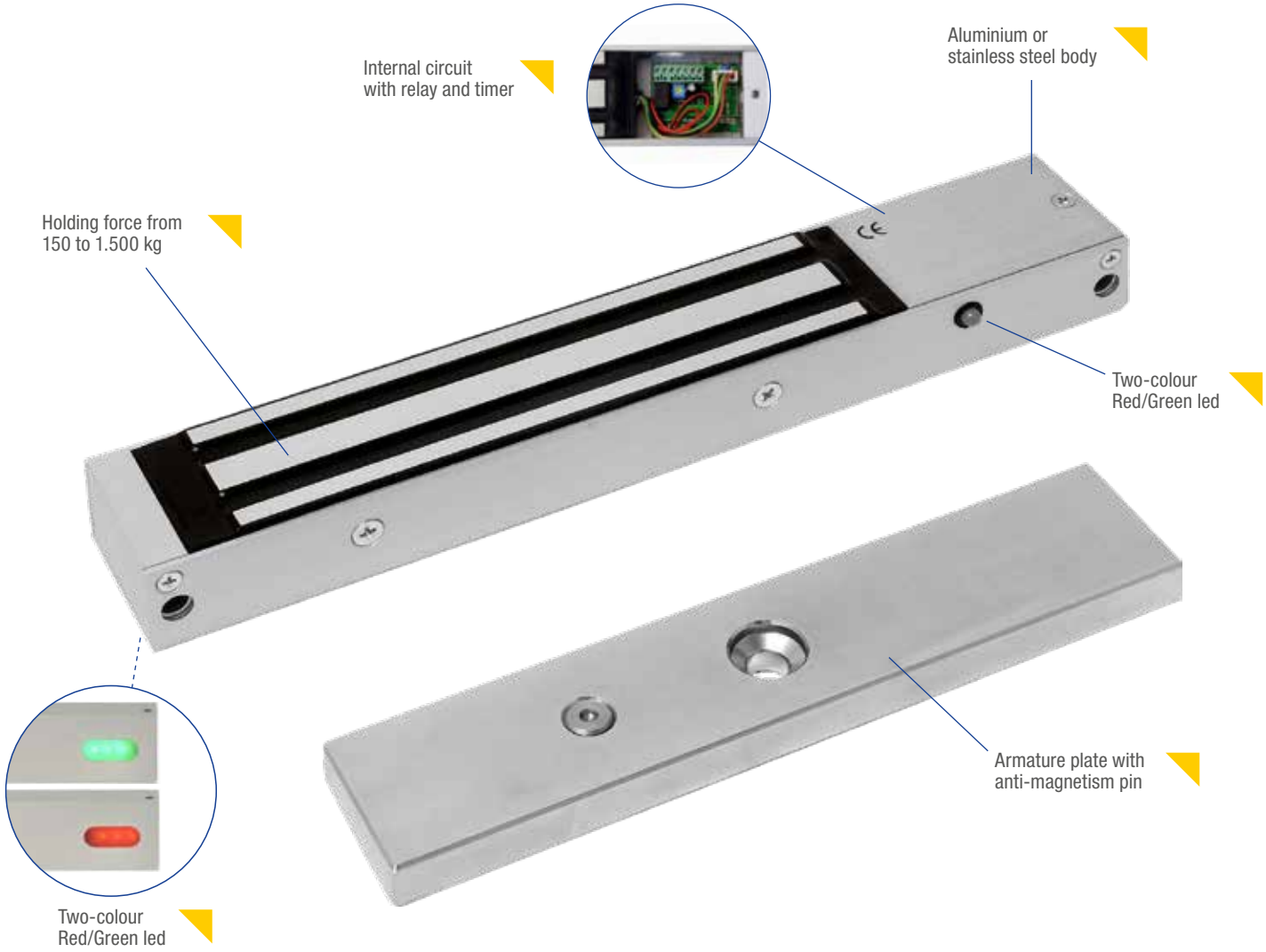

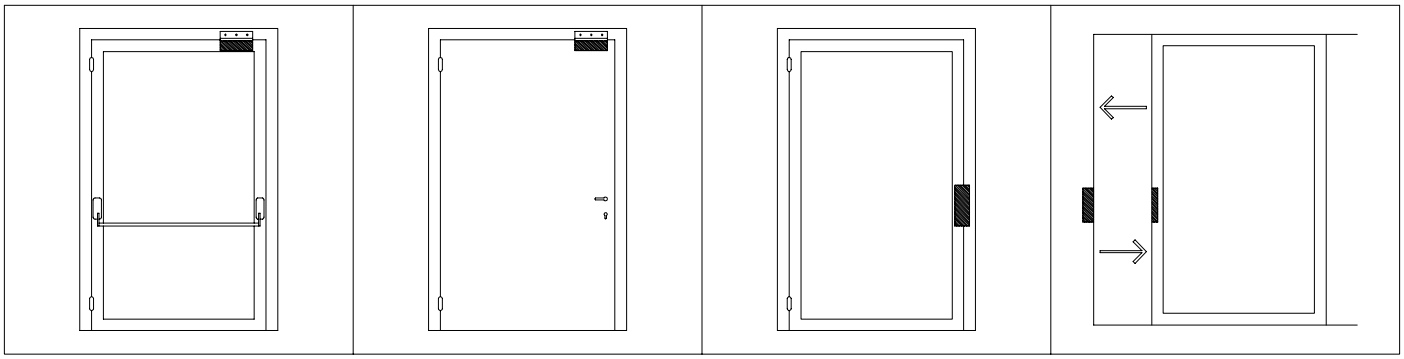

Controlled emergency exits | Office internal doors | Condominium front doors | Sliding doors

PLUS

- Solenoid lock with electromagnetic holding
- Fail safe
- Easy to fix or introduce on pre-existing doors
- No maintenance or regulations needed in the course of time
- No mechanical wear out

AVAILABLE COLOURS

CONDOMINIUM FRONT DOOR EXAMPLE

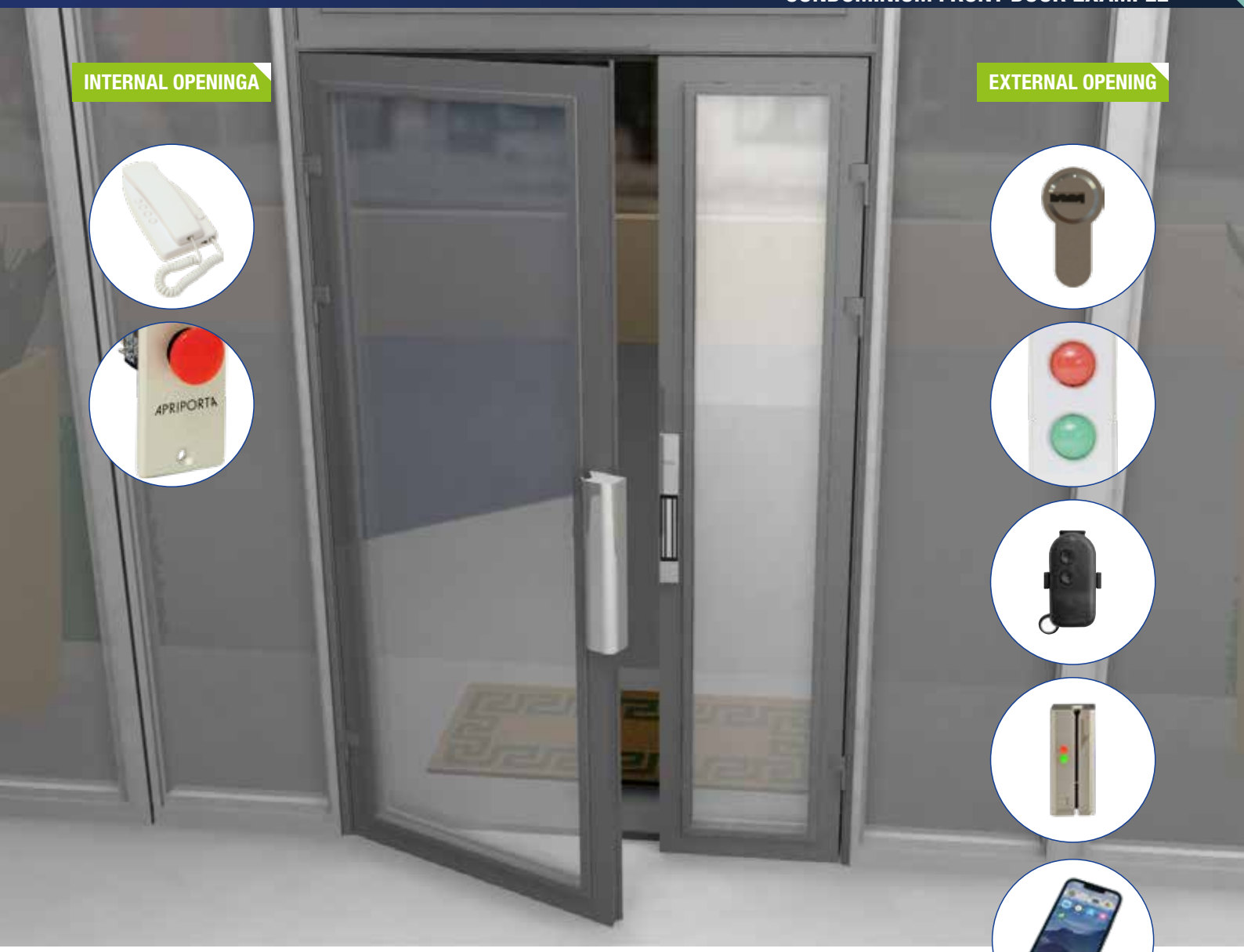

CONDOMINIUM FRONT DOOR EXAMPLE

- Always closed door guarantee
- Silent operation
- No maintenance on the electromagnet or regulation of the door closer
- Fail safe
- External opening by key switch, remote control or access control

WEB PAGE

Art.	Description	€

12500

MICRO ELECTROMAGNETIC LOCK

Version: **for mortice fixing**
body in stainless steel protected against humidity
Dimensions of the body (mm): 170 x 32 x 24
Total dimensions with side wings (mm): 200 x 32 x 24
Armature plate with residual anti-magnetism pin: (mm) 152 x 32 x 8
Operating voltage: 12 Vdc
Current: 350 mA
Holding force: up to 150 Kg.
Use: locking system for sliding doors, safe deposit boxes and cabinets

Packaging: electromagnet, armature plate and accessories for assembly

213,20

12700

MICRO ELECTROMAGNETIC LOCK

Version: **for surface fixing**
body in stainless steel protected against humidity
Dimensions (mm): 170 x 32 x 24
Armature plate with residual anti-magnetism pin: (mm) 152 x 32 x 8
Operating voltage: 12 Vdc
Current: 350 mA
Holding force: up to 150 Kg.
Use: anti-pani locking system for swing doors

Packaging: electromagnet, flat fixing plate, armature plate and accessories for assembly

213,20

MICRO ELECTROMAGNETIC LOCK

Version: **for surface fixing**
Dimensions (mm): 200 x 36 x 24
Armature plate with residual anti-magnetism pin: (mm) 152 x 32 x 8
Operating voltage: 12/24 Vdc
Current: 350 mA in 12V / 250 mA in 24V
Holding force: up to 150 Kg.
Use: anti-panic locking system for swing doors

12800	Body in silver anodized aluminium	**213,20**
12800N	Body in black anodized aluminium	**237,10**

Packaging: electromagnet, flat fixing plate, armature plate and accessories for assembly

MICRO ELECTROMAGNETIC LOCK

Version: **for surface fixing**
Body in silver anodized aluminium
Dimensions (mm): 200 x 36 x 24
Armature plate with residual anti-magnetism pin:
(mm) 152 x 32 x 8
Operating voltage: 12/24 Vdc
Current: 350 mA
Internal state sensor with C./N.O./N.C. contact
Holding force: up to 150 Kg.
Use: anti-panic closing system for swing doors

12800M	Body in silver anodized aluminium	**241,70**
12800MN	Body in black anodized aluminium	**265,60**

Packaging: electromagnet, flat fixing plate, Armature plate and accessories for assembly

Art.	Description	€

ELECTROMAGNETIC LOCK MAXI SERIES

Version: **for surface fixing**
Dimensions (mm): 265 x 66 x 41
Counterplate with residual anti-magnetism pin: (mm) 185 x 60 x 16
Operating voltage: 12/24 Vdc
Current: 500 mA @ 12 V / 250 mA @ 24 V
Holding force: up to 600 Kg.

Use: Security closing system for swing doors

13000	Body in silver anodized aluminium	**291,80**
13000N	Body in black anodized aluminium	**314,60**

Packaging: electromagnet, flat fixing plate, counterplate and accessories for assembly

ELECTROMAGNETIC LOCK MAXI SERIES WITH SENSOR

Version: **for surface fixing**
Dimensions (mm): 265 x 66 x 41
Counterplate with residual anti-magnetism pin:
(mm) 185 x 60 x 16
Operating voltage: 12/24 Vdc
Current: 500 mA @ 12 V / 250 mA @ 24 V
State sensor with Hall effect / two coloured LED Red - Green / Relay C. - N.O. - N.C.
Holding force: up to 600 Kg.

Use: Security closing system for swing doors

13100	Body in silver anodized aluminium	**327,20**
13100N	Body in black anodized aluminium	**351,10**

Packaging: electromagnet, flat fixing plate, counterplate and accessories for assembly

ELECTROMAGNET MAXI WITH ADJUSTABLE TRIMMER FOR RECLOSING TIME

Version: **for surface fixing**
Dimensions (mm): 265 x 66 x 41
Counterplate with residual anti-magnetism pin:
(mm) 185 x 60 x 16
Operating voltage: 12/24 Vdc
Current: 500 mA @ 12 V / 250 mA @ 24 V
State sensor with Hall effect / two coloured LED Red - Green / Relay C. - N.O. - N.C.
Holding force: up to 600 Kg.
Internal trimmer for reclosing time adjustable from 1 to 90 seconds

Use: Security closing system for swing doors

13100TD	Body in silver anodized aluminium	**362,50**
13100TDN	Body in black anodized aluminium	**386,50**

Packaging: electromagnet, flat fixing plate, counterplate and accessories for assembly

Art.	Description	€
	MIDI ELECTROMAGNETIC LOCK Version: **for surface fixing** Body in stainless steel with rounded sides, protected against humidity Dimensions (mm): 230 x 45 x 30 Armature plate with anti-magnetism pin (mm): 185 x 45 x 14 Operating voltage: 12 Vdc Current: 350 mA @ 12 V Holding force: up to 350 Kg. **Use:** Security locking system for swing doors	
13400	Without sensor	**278,20**
13400M	With state sensor	**298,70**
	Packaging: electromagnet, flat fixing plate, Armature plate and accessories for assembly	

13500	**ELECTROMAGNETIC LOCK MINI SERIES** Version: **for mortice fixing** Fixing bracket in silver anodized aluminium Dimensions (mm): 227 x 38 x 27 Armature plate with residual anti-magnetism pin: (mm) 185 x 37 x 12 Operating voltage: 12/24 Vdc Current: 500 mA @ 12 V / 250 mA @ 24 V Holding force: up to 300 Kg. **Use:** Security locking system for sliding doors **Packaging:** electromagnet, Armature plate and accessories for assembly	**213,20**

13500M	**ELECTROMAGNETIC LOCK MINI SERIES WITH SENSOR** Version: **for mortice fixing** Fixing bracket in silver anodized aluminium Dimensions (mm): 227 x 38 x 27 Armature plate with residual anti-magnetism pin: (mm) 185 x 37 x 12 Operating voltage: 12/24 Vdc Current: 500 mA @ 12 V / 250 mA @ 24 V State sensor with Hall effect / two coloured LED Red - Green / Relay C. - N.O. - N.C. Holding force: up to 300 Kg. **Use:** Security locking system for sliding doors **Packaging:** electromagnet, Armature plate and accessories for assembly	**237,10**

	ELECTROMAGNETIC LOCK MINI SERIES Version: **for surface fixing** Dimensions (mm): 250 x 41 x 24 Armature plate with residual anti-magnetism pin: (mm) 185 x 37 x 12 Operating voltage: 12/24 Vdc Current: 500 mA @ 12 V / 250 mA @ 24 V Holding force: up to 300 Kg. **Use:** Security locking system for swing doors	
13600	Body in silver anodized aluminium	**228,00**
13600N	Body in black anodized aluminium	**251,90**
	Packaging: electromagnet, flat fixing plate, Armature plate and accessories for assembly	

Art.	Description	€

ELECTROMAGNETIC LOCK MINI SERIES

Version: **for surface fixing**
Dimensions (mm): 250 x 41 x 24
Armature plate with residual anti-magnetism pin: (mm) 185 x 37 x 12
Operating voltage: 12/24 Vdc
Current: 500 mA @ 12 V / 250 mA @ 24 V
State sensor with Hall effect / two coloured LED Red - Green / Relay C. - N.O. - N.C.
Holding force: up to 300 Kg.

Use: Security locking system for swing doors

13700	Body in silver anodized aluminium	**248,50**
13700N	Body in black anodized aluminium	**272,50**

Packaging: electromagnet, flat fixing plate, Armature plate and accessories for assembly

ELECTROMAGNET MINI WITH ADJUSTABLE TRIMMER FOR RECLOSING TIME

Version: **for surface fixing**
Dimensions (mm): 250 x 41 x 24
Armature plate with residual anti-magnetism pin: (mm) 185 x 37 x 12
Operating voltage: 12/24 Vdc
Current: 500 mA @ 12 V / 250 mA @ 24 V
State sensor with Hall effect / two coloured LED Red - Green / Relay C. - N.O. - N.C.
Holding force: up to 300 Kg.
Relock time delay adjustable from 1 to 90 seconds

Use: Security locking system for swing doors

13700TD	Body in silver anodized aluminium	**279,30**
13700TDN	Body in black anodized aluminium	**303,20**

Packaging: electromagnet, flat fixing plate, Armature plate and accessories for assembly

ELECTROMAGNET MINI WITH ADJUSTABLE TRIMMER FOR RECLOSING TIME AND MAXI LED

Version: **for surface fixing**
Dimensions (mm): 265 x 49 x 29
Armature plate with residual anti-magnetism pin: (mm) 185 x 45 x 14
Operating voltage: 12/24 Vdc
Current: 500 mA @ 12 V / 250 mA @ 24 V
State sensor with Hall Effect - Relay C. - N.O. - N.C.
Two coloured Red/Green LED for door status indication located in the back of the magnet body
Holding force: up to 360 Kg.
Relock time delay adjustable from 1 to 80 seconds

Use: Security locking system for swing doors

13700TDL	Corpo in alluminio anodizzato argento	**296,40**

Packaging: electromagnet, flat fixing plate, Armature plate and accessories for assembly

Art.	Description	€
13800	**ELECTROMAGNET SHEAR LOCK** Version: **for mortice fixing** Bracket in black painted aluminium Dimensions of the bracket (mm): 267 x 35 x 35 Dimensions of body for mortice fixing (mm): 220 x 35 x 35 Armature plate with residual anti-magnetism pin Operating voltage: 12/24 Vdc Absorbed current: 1.8 A peak / 500 mA @ 12 V 1 A peak / 350 mA @ 24 V State sensor with Hall effect / Relay C. - N.O. - N.C. Door position magnetic sensor Internal management electronics with relocking adjustable from 0 - 15 sec. Holding force against forced entry up to 1,500 Kg. **Use:** high security anti-panic locking system for swing doors. For correct operation the electromagnet must be mounted horizontally on the frame header with the Armature plate mounted on the frame of the door **Packaging:** electromagnet, Armature plate and accessories for assembly	568,90

Art.	Description	€
	ELECTROMAGNET MICRO SHEAR LOCK Version: **for mortice fixing** Electromagnet support bracket and Armature plate in silver anodized aluminium Electromagnet support bracket: 180 x 30 x 27 mm. Armature plate support bracket dimensions: 180 x 30 x 42 mm. Armature plate with residual anti-magnetism pin: Operating voltage: 12/24 Vdc Current: 420 mA @ 12 V / 220 mA @ 24 V 450 mA @ 12 V / 250 mA @ 24 V for version M State sensor with Hall effect / Relay C. - N.O. - N.C. (only for Art. 13900M) Holding force: up to 680 Kg. **Use:** anti-panic locking system with dragging feature for swing doors with stops. For correct operation the electromagnet must be mounted horizontally in the frame header with the armature plate mounted on top of the door	
13900	Without door state sensor	294,10
13900M	With door state sensora	337,40
	Packaging: electromagnet, Armature plate and accessories for assembly	

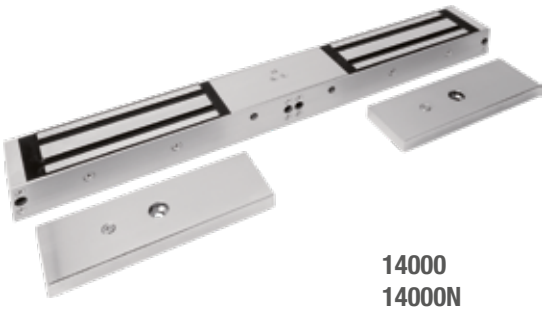

Art.	Description	€
	ELECTROMAGNETIC LOCK MAXI DOUBLE SERIES WITH SENSOR Version: **for surface application on double leaf doors** Dimensions (mm): 534 x 66 x 41 Armature plates with residual anti-magnetism pins: (mm) 185 x 60 x 16 Operating voltage: 12/24 Vdc Current: 500 mA ea. @ 12 V / 250 mA ea. @ 24 V State sensor with Hall effect / two coloured LED Red - Green / Relay C. - N.O. - N.C. Holding force: up to 600 Kg. x 2 **Use:** santi-panic locking system for double leaf doors	
14000	Body in silver anodized aluminium	655,50
14000N	Body in black anodized aluminium	693,10
	Packaging: electromagnet, flat fixing plate, 2 Armature plates and accessories for assembly	

Art.	Description	€

ELECTROMAGNETIC GATE LOCK SERIES WITH SENSOR

Version: **for surface fixing**
body in stainless steel protected against humidity
Dimensions (mm): 204 x 64 x 41
Armature plate with residual anti-magnetism pin: (mm) 185 x 60 x 16
Magnetic reed state sensor C / N.O. / N.C.
Holding force: up to 600 Kg.

Use: Security locking system for hinged and sliding gates

14212R	Operating voltage: 12 Vdc - Current: 450 mA	**314,60**
14224R	Operating voltage: 24 Vdc - Current: 230 mA	**314,60**

On demand: Conduit connector fitting - see page 39

Packaging: electromagnet, Armature plate and accessories for assembly

ELECTROMAGNET WITH PULL HANDLE

Version: **for surface fixing**
CorpoElectromagnet body and handle in aluminium
Magnet body dimensions (mm): 324 x 48 x 29
Dimensions of the handle (mm) 333 x 124 x 62
Armature plate with residual anti-magnetism pin inserted in the handle body
Operating voltage: 12/24 Vdc
Current: 500 mA @ 12 V / 250 mA @ 24 V
Internal state sensor with C./N.O./N.C. relay output
Holding force: up to 300 Kg.
Relocking time adjustable from 1 to 90 seconds.

Use: anti-panic locking system for swing doors
(i.e. condominium front entrance doors)

Release push button housed in the handle body

14710TD	Body in silver anodized aluminium	**433,20**
14710TDN	Body in black anodized aluminium	**456,00**

On demand: spacer for handle body and electromagnetic lock see 00147 or 00147N at page 53

Packaging: electromagnet, Armature plate and accessories for assembly

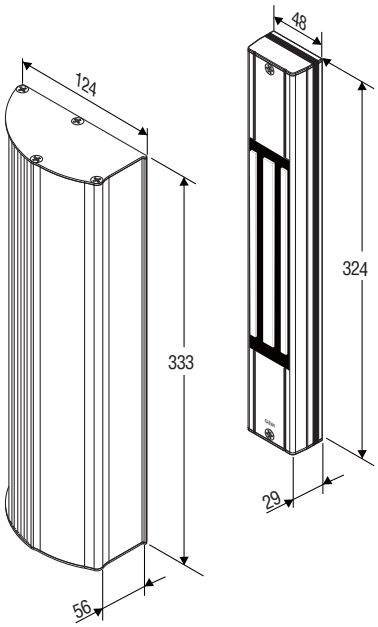

Door locked

Door unlocked

Door opened

Art.	Description	€
	ELECTROMAGNETIC LOCK MINI SERIES WITH LONG HANDLE Version: **for surface fixing** Electromagnet body and handle in aluminium Magnet body dimensions (mm): 2484 x 48 x 29 (can be cut down to 1884mm) Dimensions of the handle (mm) 2503 x 124 x 56 Armature plate with residual anti-magnetism pin inserted in the handle body Operating voltage: 12/24 Vdc Current: 500 mA @12 V / 250 mA @24 V Internal state sensor with C./N.O./N.C. relay output Holding force: up to 300 Kg x 2 Relocking time adjustable from 1-90 seconds Release push button on the handle Possibility to install the magnet in the handle housing (moving leaf) and the striking plate on the frame **Use:** anti-panic locking system for swing doors (i.e. condominium front entrance doors)	
14800TD	Corpo in alluminio anodizzato argento	**866,40**
	Packaging: electromagnet, Armature plate and accessories for assembly	

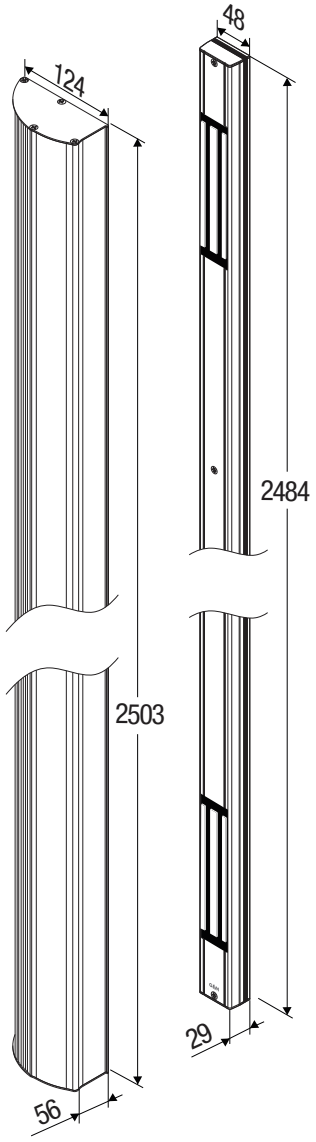

Art.	Description	€

13700KIT TF

ELECTROMAGNETIC LOCK MINI SERIES WITH POWER SUPPLY

515,10

Features: locking of fire doors via safety electromagnet.
Opening managed from inside the room by means of micro-switch command installed on the anti-panic bar which activates upon pressing the opening bar and by means of a key switch or access control system from outside. Release of the electromagnet can also be managed from a remote position with a special push button.

Kit is made up of:
1 Electromagnet Art. 13700TD
1 "L" Bracket Art. 03700
1 Base stainless steel armature plate Art. 03003
1 Power supply Art. 05320

13700KIT TFB

ELECTROMAGNETIC LOCK MINI SERIES WITH POWER SUPPLY AND BACKUP BATTERY

699,20

Features: the functional characteristics are the same as the previous item except the power supply. It is provided in a wall-mounted, grey ABS container with space for the backup battery.

Kit is made up of:
1 Electromagnet Art. 13700TD
1 "L" Bracket Art. 03700
1 Base stainless steel armature plate Art. 03003
1 Power supply Art. 05312
1 Rechargeable battery Art. 00712

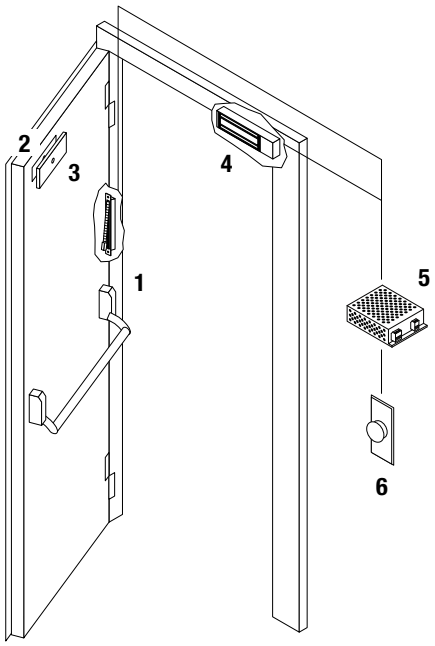

LEGENDA

1 Panic bar with micro switches and lead covers (upon request)
2 Striking plate base
3 Striking plate
4 Electromagnet
5 Power supply
6 Release button or key switch (optional)

	Art.	Description	€
	03000 03000N	**"L" MOUNTING BRACKET** In SILVER anodized aluminium In BLACK anodized aluminium Dimensions (mm): 268 x 38 x 76 **Use:** for mounting of electromagnets, series 130, 131 and 140 on "push" doors from inside with emergency type exits (See drawing at page 53)	39,20 45,60
	03001 03001N	**"Z" MOUNTING BRACKET** In SILVER anodized aluminium In BLACK anodized aluminium Dimensions (mm): 266 x 38 x 76 mm. (L bracket) 220 x 142 x 71-98 mm. (Z bracket) **Use:** for mounting of electromagnets, series 130, 131 and 140 on "pull" doors from inside. Kit is made up of 3 pieces. (See drawing at page 53)	136,80 156,90
	03002	**UNIVERSAL, ADJUSTABLE "L" MOUNTING BRACKET** In galvanized white steel Dimensions (mm): 268 x 38 - 76 mm. **Use:** for mounting of electromagnets, series 130, 131 and 140 on "push" doors from inside with emergency type exits (See drawing at page 53)	40,80
	03003	**"UNIVERSAL" ARMATURE PLATE FOR FIRE DOORS** Armature plate base for fixing the holding Armature plate on fire doors without drilling supplementary holes Dimensions (mm): 175 x 32 x 3 **Use:** for all electromagnets 130, 131, 136, 137, 140 (See drawing at page 53)	42,70
	03004	**"UNIVERSAL" ARMATURE PLATE BASE FOR SAFETY AND FIRE DOORS** Armature plate base in stainless steel for fixing the holding Armature plate on fire doors without using through bolt screws on the outside of the door Dimensions (mm): 200 x 65 x 16 **Use:** for all electromagnets 130, 131, 136, 137, 140 (See drawing at page 53)	26,10
	03005	**SHORT CASING COVER** In black varnished steel for covering only the "L" bracket Art. 03000, 03002 Dimensions (mm): 271 x 41 x 79 - see drawing at page 54 **Use:** for all electromagnets 130, 131	47,40
	03006	**LONG CASING COVER** In black varnished steel for covering the "L" bracket Art. 03000, 03002 and the electromagnets Dimensions (mm): 271 x 113 x 79 **Use:** for all electromagnets 130, 131(See drawing at page 54)	56,90
	03007	**"GLASS" ARMATURE PLATE MOUNTING BRACKET** For 12 mm. thick doors. Dimensions (mm): 190 x 56 x 22 **Use:** for fixing of the Armature plate for electromagnets series 136 and 137 on glass doors (See drawing at page 54)	64,00

	Art.	Description	€
	03500 03500N	**"L" MOUNTING BRACKET** In SILVER anodized aluminium In BLACK anodized aluminium Dimensions (mm): 170 x 28 x 36 **Use:** for mounting of electromagnets, series 127 on "push" doors from inside with emergency type exits (See drawing at page 54)	37,60 44,50
	03501 03501N	**"Z" MOUNTING BRACKET** In SILVER anodized aluminium In BLACK anodized aluminium Dimensions (mm): 180 x 88 x 39-48 - see drawing at page 53 **Use:** for mounting of electromagnets, series 127 on "pull" doors from inside. Kit is made up of 2 pieces **Note:** article made up of 2 pieces only for fixing of the Armature plate. For fixing of the electromagnet, the "L" bracket must be added - Ref. 03500	79,80 91,20
	03600 03600N	**"L" MOUNTING BRACKET** In SILVER anodized aluminium In BLACK anodized aluminium Dimensions (mm): 200 x 41 x 27 **Use:** for mounting of electromagnets, series 128 on "push" doors from inside with emergency type exits (See drawing at page 53)	37,60 44,50
	03601 03601N	**"Z" MOUNTING BRACKET** In SILVER anodized aluminium In BLACK anodized aluminium Dimensions (mm): 180 x 88 x 39 **Use:** for mounting of electromagnets, series 128 on "pull" doors from inside. Kit is made up of 3 pieces (See drawing at page 53) **Note:** article made up of 2 pieces only for fixing of the armature plate and 1 L braket for the fixing of the magnet	117,40 135,70
	03700 03700N	**"L" MOUNTING BRACKET** In SILVER anodized aluminium In BLACK anodized aluminium Dimensions (mm): 250 x 30 x 48 **Use:** for mounting of electromagnets, series 136,137 on "push" doors from inside with emergency type exits (See drawing at page 53)	37,60 44,50
	03701 03701N	**"Z" MOUNTING BRACKET** In SILVER anodized aluminium In BLACK anodized aluminium Dimensions (mm): 250 x 30 x 48 mm. (L bracket) 220 x 113 x 55 - 77 mm. (Z bracket) **Use:** for mounting of electromagnets, series 136,137 on "pull" doors from inside. Kit is made up of 3 pieces. (See drawing at page 53)	135,70 155,00
	03705	**SHORT CASING COVER** In black varnished steel for covering only the "L" bracket Art. 03700 Dimensions (mm): 254 x 32 x 51 **Use:** for all electromagnets 136 and 137 (See drawing at page 54)	47,40

	Art.	Description	€
	03706	**LONG CASING COVER** In black varnished steel for covering the "L" bracket Art. 03700 and the electromagnets Dimensions (mm): 254 x 81 x 51 **Use:** for all electromagnets 136 and 137 (See drawing at page 54)	56,90
	03707 03707N	**"L" BRACKET WITH CASING COVER** In SILVER anodized aluminium In BLACK anodized aluminium Dimensions (mm): 247 x 48 x 30 **Use:** for mounting of electromagnets, series 136, 137 on "push" doors from inside with emergency type exits complete with casing cover (See drawing at page 54)	65,00 78,70
	03707L 03707LN	**"L" BRACKET WITH CASING COVER** In SILVER anodized aluminium In BLACK anodized aluminium Dimensions (mm): 262 x 48 x 30 **Use:** for mounting of electromagnets, series 13700TDL on "push" doors from inside with emergency type exits complete with casing cover (See drawing at page 54)	65,00 78,70
	03708 03708N	**"Z" BRACKET WITH CASING COVER** In SILVER anodized aluminium In BLACK anodized aluminium Dimensions (mm): 250 x 97 x 48 - 70 mm - see drawing page 38 **Use:** for mounting of Armature plate for electromagnets, series 136, 137 on "pull" doors from inside complete with casing cover (See drawing at page 54) **Note:** article made up of 2 pieces only for fixing of the Armature plate. For fixing of the electromagnet, the "L" bracket must be added - Ref. 03700	150,50 169,90
	03708L 03708LN	**"Z" BRACKET WITH CASING COVER** In SILVER anodized aluminium In BLACK anodized aluminium Dimensions (mm): 262 x 104 x 48 - 70 mm. **Use:** for mounting of Armature plate for electromagnets, series 13700TDL on "pull" doors from inside complete with casing cover **Note:** article made up of 3 pieces only (See drawing at page 54)	188,10 214,30
	03709 03709N	**SHEAR LOCK CASING FOR ELECTROMAGNET** In SILVER anodized aluminium In BLACK anodized aluminium Dimensions (mm): 352 x 50 x 45 **Use:** for surface mounting of the electromagnets Shear-Lock on solid or pre-existing doors (See drawing at page 54) Packaging: 1 Carter for fixing of the electromagnet or the Armature plate and mounting accessories	80,90 94,60
	03710 03710N	**MICRO SHEAR LOCK CASING FOR ELECTROMAGNET** In SILVER anodized aluminium In BLACK anodized aluminium Dimensions (mm): 183 x 49 x 36 **Use:** for surface mounting of the electromagnets Micro Shear-Lock for rim type application (See drawing at page 54) **Packaging:** 1 Carter for fixing of the electromagnet or the Armature plate and mounting accessories	80,90 94,60

	Art.	Description	€
		ARMATURE PLATES FOR ELECTROMAGNETS (SPARES)	
	01127	For electromagnets series 125, 127, 128	**55,70**
	01130	For electromagnets series 130, 131, 132, 140	**64,00**
	01134	For electromagnets series 134	**59,30**
	01137	For electromagnets series 135, 136, 137	**59,30**
	01137L	For electromagnets series 13700TDL	**59,30**
	00142	**CONDUIT CONNECTOR FITTING - IP65** Conduit connector fitting - this connector is used to terminate flexible metal conduit to knockout in dry location For electromagnets series 14212R and 14222R Supplied with metal sheath black coloured 1Mt long	**17,80**
		UNDERPLATE FOR ELECTROMAGNET REF. 14700TD 2 mm thick stainless steel underplate for the compensation of the alignment between the electromagnet and counterplate mounted on doors that are not coplanar Dimensions (mm): 323 x 48 x 2	
	00147	Stainless steel finish	**13,00**
	00147N	Black steel finish	**15,40**

Base Art. 03003

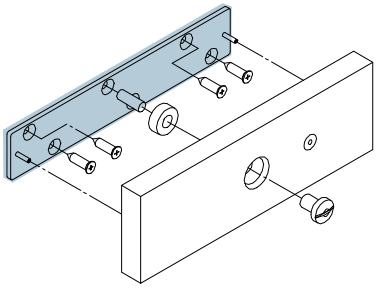

Base Art. 03004

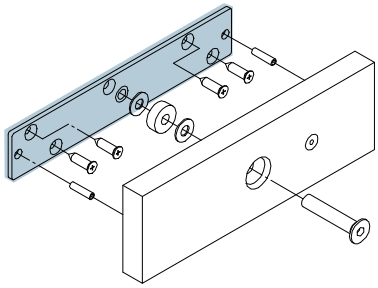

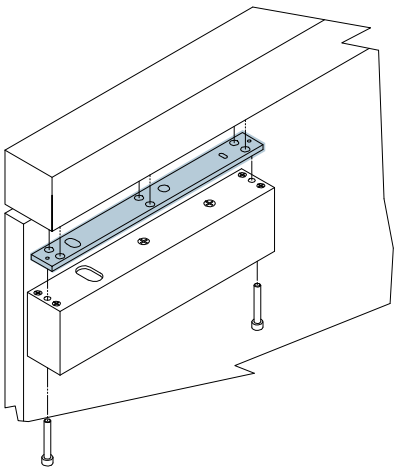

Bracket provided

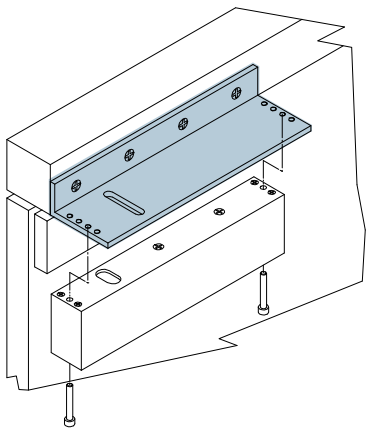

"L" shape bracket
item code 03002

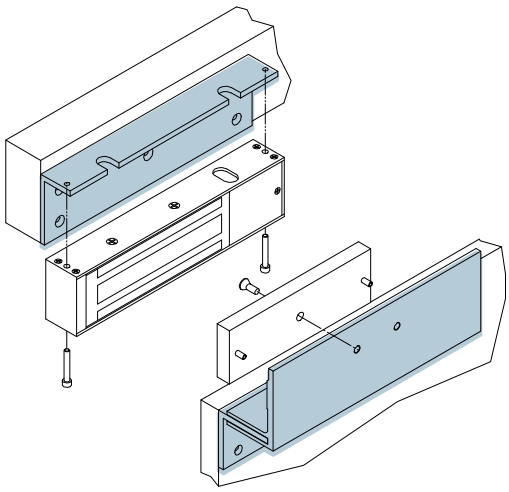

"Z" shape bracket

Short cover

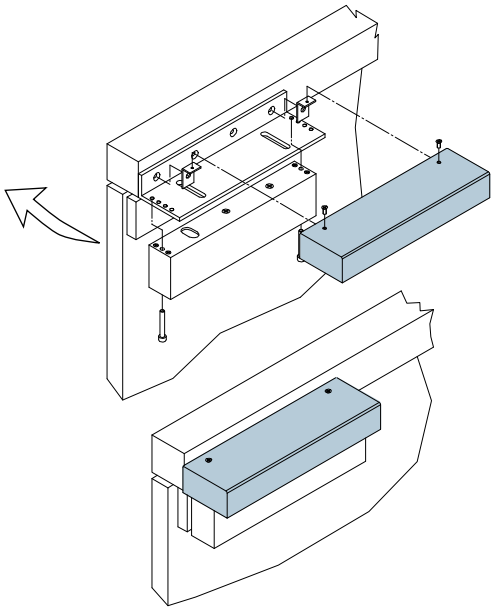

Long cover

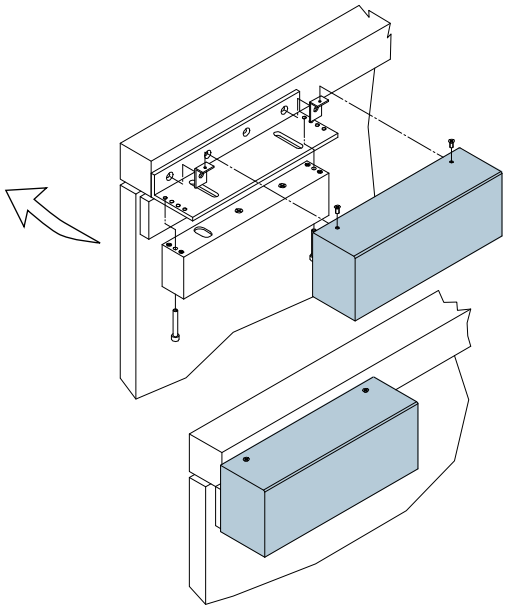

"L" shape bracket with cover

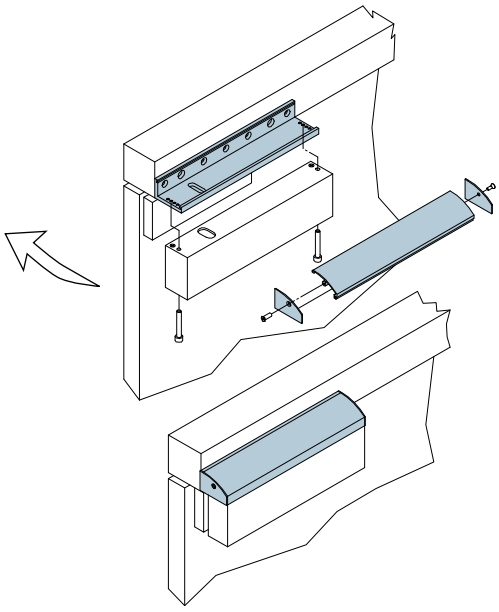

"Z" shape bracket with cover

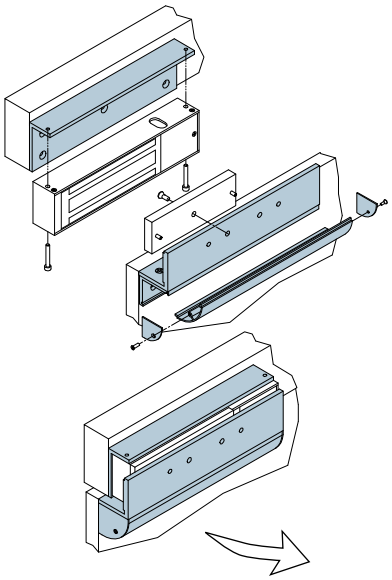

"U" shape bracket

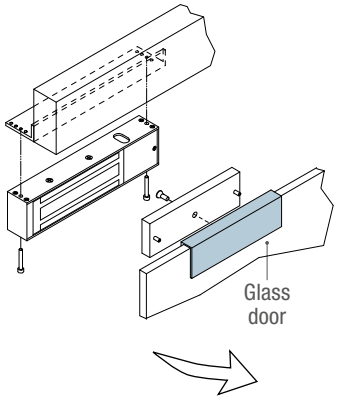

Spacer for magnet14710

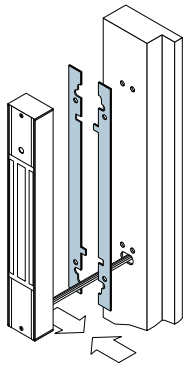

COVER CARTER SHEAR-LOCK

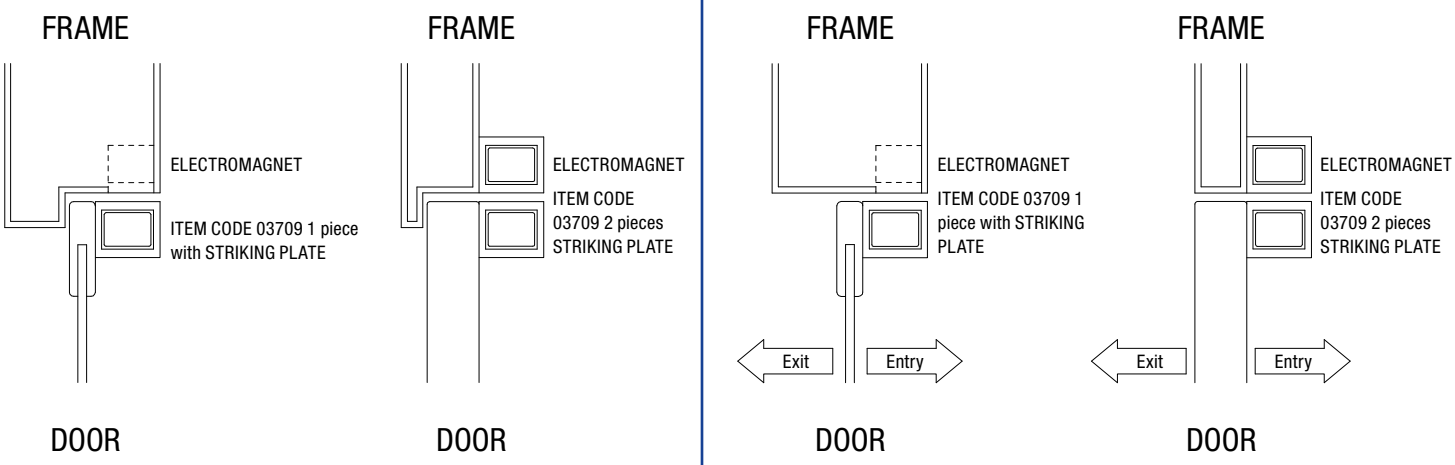

HOW SHEAR-LOCK WORKS

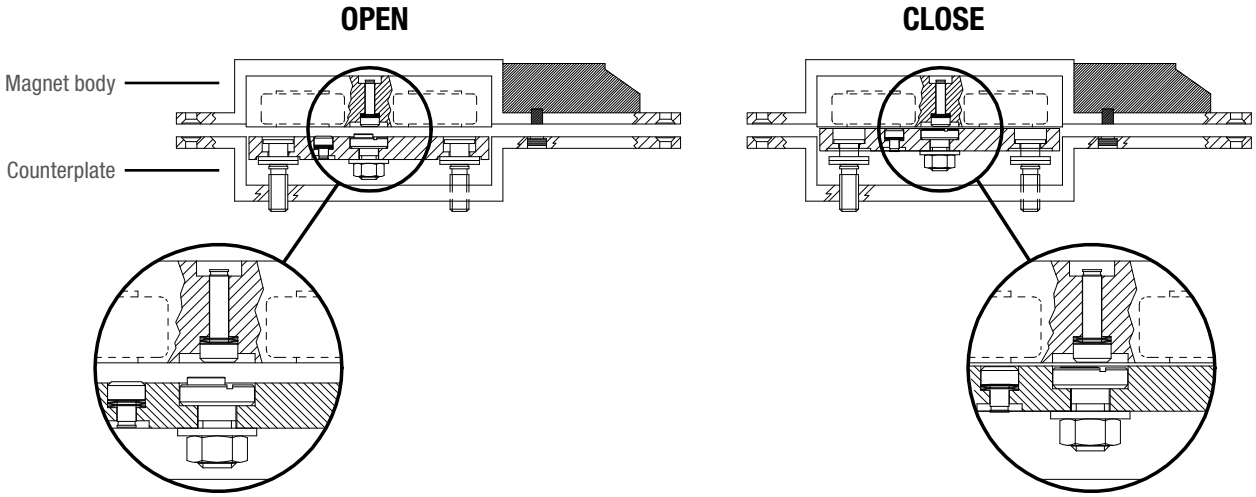

ENTRANCE DOOR SYSTEM WITH SAFETY RANGE ELECTROMAGNET 147

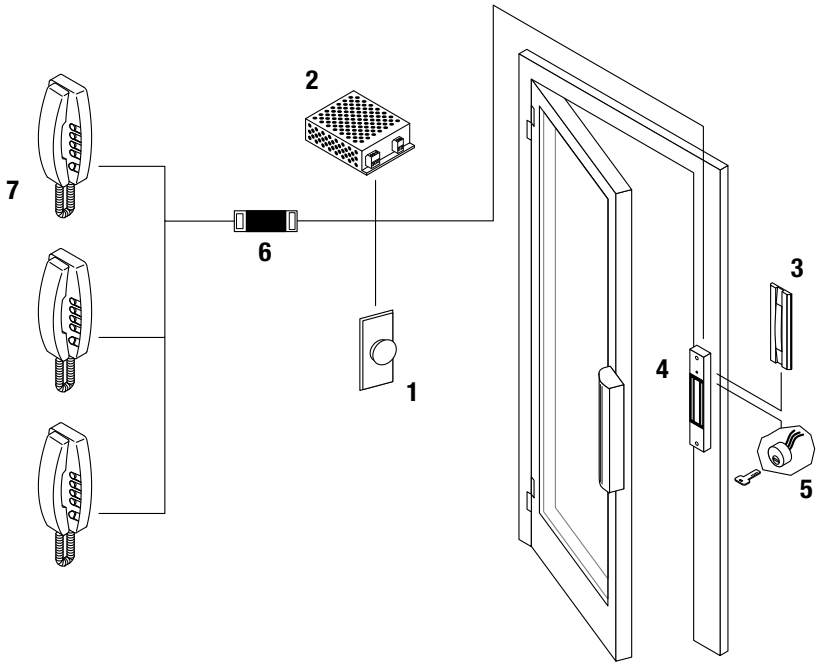

LEGENDA

1 Push button
2 Power supply
3 Indicator lamp
4 Electromagnet
5 Key selector
6 Relay module
7 Interphone system

INTERLOCKING DOORS SYSTEM WITH SAFETY RANGE ELECTROMAGNETS

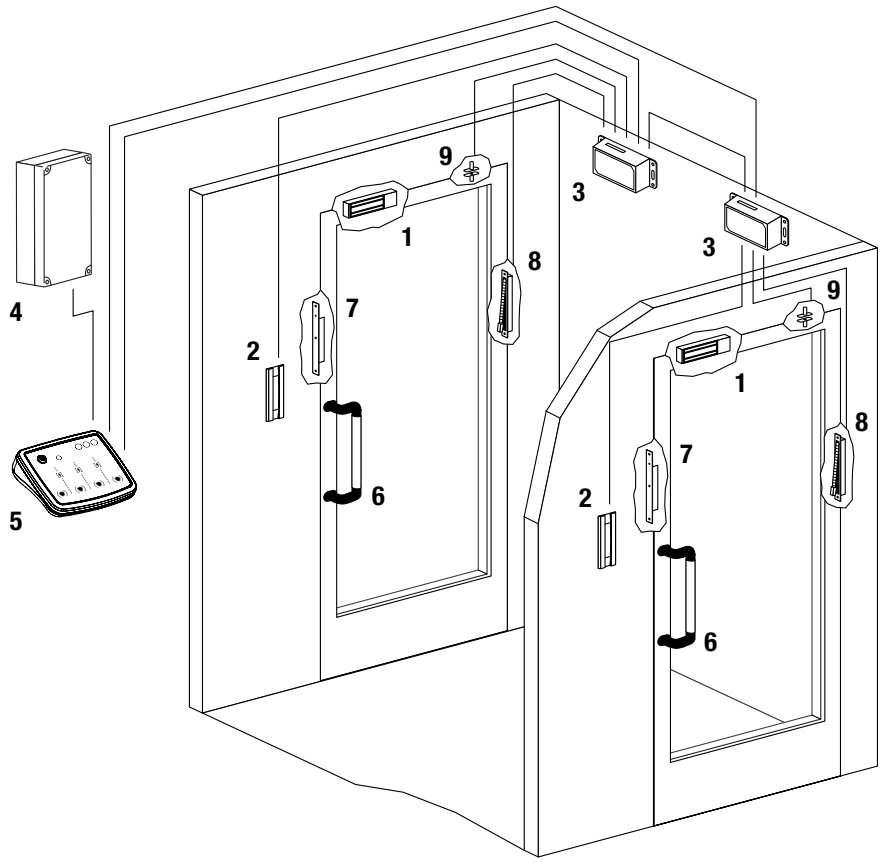

LEGENDA

1 Electromagnets
2 Indicator lamps
3 Electronic Unit
4 Power supply
5 Command console
6 Sensitive bars
7 Sensitive cards
8 Lead Covers
9 Magnetic sensors

Art.	Description	€

51300

RELOCKING DELAY MODULE

72,30

Electronic board for management of relocking delay for all safety electromagnets
Dimensions (mm): 60 x 28 x 17
Operating voltage: 12 / 24 Vdc
Relock time adjustable from 1 - 40 seconds

Use: board which can also be inserted inside electromagnets Art. 13000, 13100, 14000
Can be connected externally to the other electromagnet articles not already timed

51400

OPENING DELAY MODULE

171,90

Electronic board for management of the opening delay for the emergency exits equipped with safety electromagnets
Dimensions (mm): 57 x 42 x 17
Operating voltage: 12 / 24 Vdc
Relock time adjustable from 0 - 15 seconds
N.O. input for begin delay contact
N.O. input for timer reset
12 Vdc output for alarm buzzer

Use: board which can also be inserted inside electromagnets Art. 13000, 13100, 14000
Can be connected externally to the other electromagnet articles

51500

RELOCKING DELAY RELAY MODULE

72,30

Electronic board for timed management of electric lock activation
Dimensions (mm): 61 x 61 x 12
Operating voltage: 12 Vdc / 10 mA at rest - 60 mA with relay active
Relock time adjustable from 0 - 30 seconds
N.O. input for relay activation contact
Relay output with C./N.O./N.C. dry contact

Use: board which can also be inserted inside activation button Art. 05115 (see page 64)

APPLICATIONS EXAMPLES ART. 51500

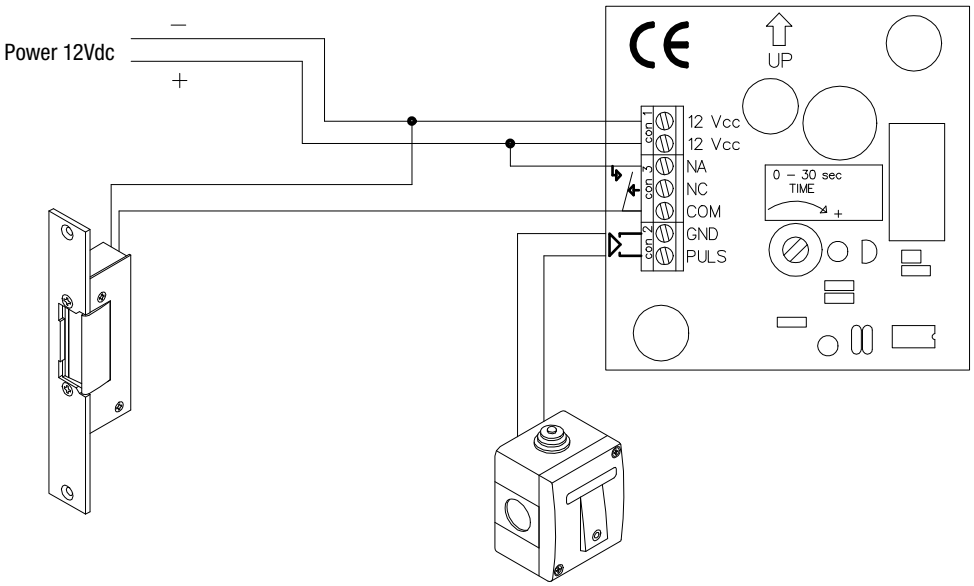

Art.	Description	€
55001	**MANAGEMENT ELECTRONICS "EXIT SYSTEM"** Electronic board for management and control of opening emergency exits equipped with electromagnets in the Safety series. Wall mount container in grey, inspectable ABS, complete with 230 / 12 Vac transformer Dimensions (mm): 300 x 225 x 130 Board power: 12 Vac/dc Built-in backup battery charger circuit Adjustable timer for: Opening request only alarmed or delayed from 5 to 60 seconds - Delayed alarm opening from the outside from 10 to 120 Seconds (can be enabled) - Manual opening management with relocking from 0 to 5 seconds upon approach of the door and from 0 to 60 seconds if the door is not opened - Alarm for prolonged opening of the door from 10 to 120 seconds (can be enabled) Inputs with N.O. contact for: - Immediate opening - Opening from key switch with delayed alarm - Delayed opening or request for opening with alarm - Emergency - Block - Reset Outputs with N.O. relay contact for: - Electromagnetic blocked/unblocked status (double switching) - Opening request alarm or delayed opening - Prolonged door opening alarm - Emergency opening alarm - Delayed alarm for opening from the outside - System Fault Alarm - Starting of system Door position open/closed (Open Collector) **On request:** backup battery Art. 00712 (page 219)	610,60

CONTROL CONSOLE "CONTROL SYSTEM"
Aluminium console box in black with silk screened polycarbonate panel
Membrane button with touch effect
Dimensions (mm): 195 x 160 x 50
Operating voltage: 12/24 Vac/Vdc
Connections via screw terminal block
ON/OFF key switch for turning off system via external relay (i.e. Art. REL12V)
N.O. input for signalling electromagnet status (blocked / unblocked)
N.O. input for signalling door status
N.O. / + 12 Vdc Input for alarm activation
N.O. Output for door opening command
N.O. Output for reset command
N.O. Output for block command
N.O. Output for emergency command
Optical signalling via LED:
Red / Green magnet status (blocked / unblocked)
Red / Green for indication of door Open / Closed
Red for Alarm, Reset, Emergency, Block, Power
Internal buzzer for acoustic signalling of the pressing of buttons, for signalling of active alarms and low battery
Note: complete characteristics of the console page 146

54611A	For 1 door	430,40
54612A	For 2 doors	465,90

Use: universal console for Art. 51400 or 55001

Art.	Description	€
55003	**ELECTROMAGNET WITH "EXIT SYSTEM" INTEGRATED MANAGEMENT ELECTRONICS** Version: **to apply** Casing made of brushed stainless steel Casing dimensions: 280 x 158 x 115 mm Nickel-plated steel fixing bracket Electronic board for the management and opening control of the emergency exits equipped with Safety series electromagnets. Maxi series internal electromagnet made of silver anodized aluminum Restraint counterplate to be fixed on the door with anti-residual magnetism pin: 185 x 60 x 16 mm Traction force: up to 600 kg. Power supply: 12V ac/dc Hall effect electromagnet status sensor Optical signaling of the status (standby/alarm) through red - green jumbo LED Acoustic signal of the alarm status by buzzer Internal relay on the status of the blocked/unblocked electromagnet with C. - N.A. - N.C. contacts Rechargeable plug battery 12 Vdc / 2.2 A Electronic board for the management and opening control of the emergency exit Adjustable timing for: - Opening request delayed from 5 to 60 sec with alarm - Opening alarm from outside delayed from 10 to 120 sec - Manual opening management with reclosing from 0 to 5 sec. with approach of door and from 0 to 60 sec. if the door is not opened - Door opening prolonged alarm from 10 to 120 sec. Inputs with N.O. contact for: - Immediate opening - Immediate opening by mechanical key switch from outside, with delayed alarm - Delayed opening or request of opening with alarm - Emergency - System block - Alarm reset Outputs with N.O contact for: - Electromagnet status (double switching) - Alarm, Opening request time delay - Alarm, Prolonged door opening - Alarm, Emergency - Alarm, Opening from outside - Alarm, System fault - Starting of system - Door position contact (Open Collector)	946,10

SINGLE DOOR SYSTEM WITH SAFETY RANGE ELECTROMAGNETS

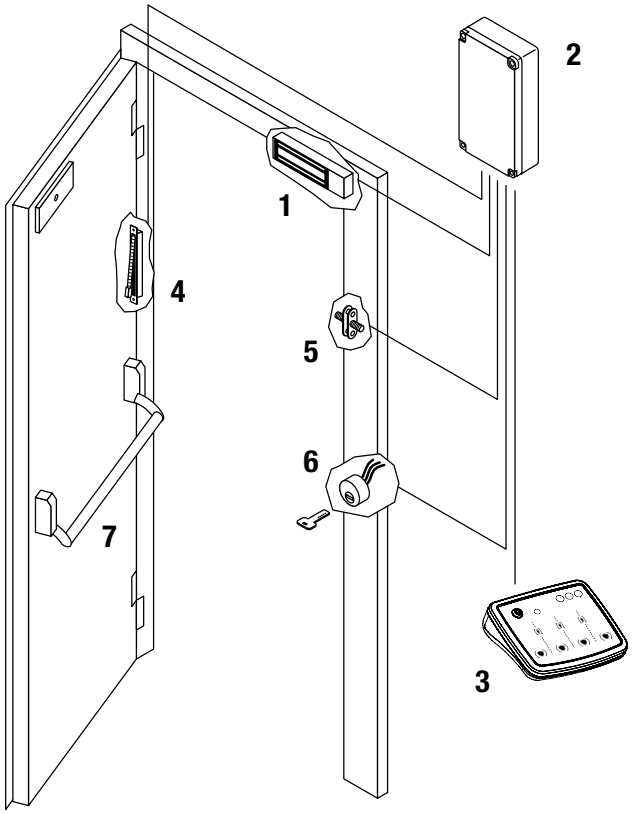

LEGENDA

1 Electromagnet
2 Exit System Electronics
3 Console
4 Concealed lead cover
5 Magnetic sensor
6 Key switch
7 Panic bar with micro switch

EMERGENCY EXIT WITH SAFETY ELECTROMAGNET

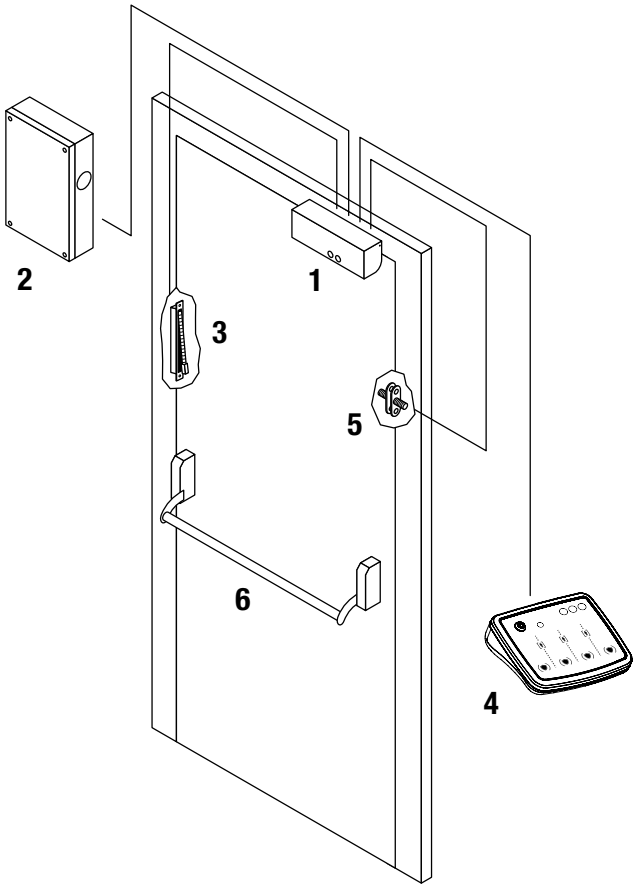

LEGENDA

1 Electromagnet with Exit System electronics
2 Power supply
3 Concealed lead cover
4 Console
5 Magnetic sensor
6 Panic bar with micro switch

Art.	Description	€
55005	**SELF-MANAGED ALARM "ALARM SYSTEM"** Alarm system for opening control of emergency exits equipped with only a mechanical lock or panic bar. Wall mount container in beige ABS Dimensions (mm): 240 x 150 x 48 Board power: 12 Vac/dc Built-in backup battery charger circuit Alarm signalling via lamp and intermittent buzzer **Use:** alarm system for emergency exits Adjustable timer for: - Alarm interval before self-reset (adjustable from 5 to 60 seconds) - Turning off of the reset alarm with fixed time of 5 seconds - Alarm for prolonged opening of the leaf from 5 to 120 seconds Inputs with N.O. contact for: - Immediate authorised opening (without alarm) - Door sensor - Reset Outputs with N.O. relay contact for: - Unauthorised opening alarm - Prolonged door opening alarm - Starting of system Description of operation: the central unit allows surveillance of passages through emergency exits. Personnel authorised to pass, activating a dry contact with a badge, keypad, key switch, etc... can open the door without activating the alarm. If the door is reclosed within the set time, no alarm is activated. If the door must remain open beyond the door "Prolonged Opening" time, the specific alarm is activated which deactivates automatically upon relocking of the door or by pressing the reset button. On the contrary, if the door is opened without authorisation, the "Opening" alarm is activated immediately and remains active for the pre-established interval, after which an auto-reset is automatically performed which deactivates the alarm for 5 seconds. At this point, if the door has been reclosed, the system goes back into stand-by. Otherwise, if the door remains open, the alarm status will reactivate. The reset can also be performed by remote button.	269,10

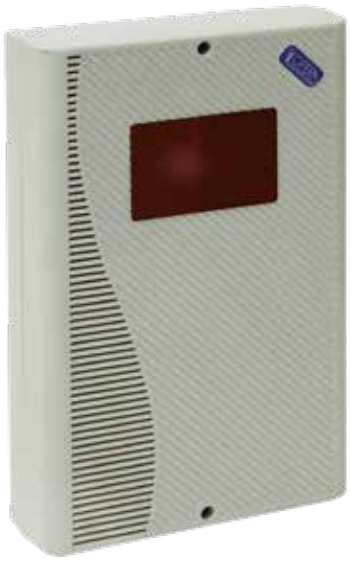

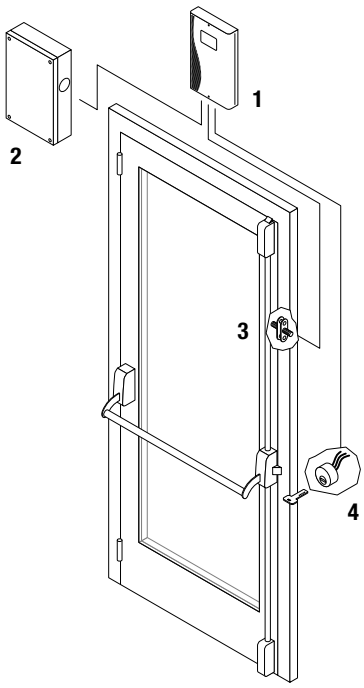

LEGENDA

1 Single zone fire alarm panel
2 Power transformer or power supply
3 Magnetic sensor
4 Key switch

FIRE CONTROL

- FIRE HOLD OPEN MAGNETS
- HYDRAULIC DAMPERS FOR SLIDING DOORS
- HYDRAULIC IMPACT SHOCK ABSORBERS
- SINGLE ZONE FIRE CONTROLLER
- FIRE AND SMOKE DETECTORS

OPERA
OPERATING ACCESS

FIRE CONTROL

www.opera-italy.com

AVAILABLE COLOURS

Black Abs | Grey Abs | Silver aluminium | Gold aluminium | Black aluminium

PLUS

- Strong steel fixing base
- Steel striking plate
- Abs box, anodized aluminium or steel
- CE-EN1155 certification at the upper level
- 12 - 24 - 48V operating voltage

ISTITUTO GIORDANO
BEYOND CERTIFICATION
ORGANISMO NOTIFICATO CE N. 0407 / EC NOTIFIED BODY No. 0407

CE

CERTIFICATO DI COSTANZA DELLA PRESTAZIONE
CERTIFICATE OF CONSTANCY OF PERFORMANCE
0407-CPR-011 (IG-098-2004)

In conformità al Regolamento 305/2011/UE del Parlamento Europeo e del Consiglio del 9 marzo 2011 (Regolamento Prodotti da Costruzione o CPR), questo certificato si applica ai prodotti da costruzione
in compliance with Regulation 305/2011/EU of the European Parliament and of the Council of 9 March 2011 (the Construction Products Regulation or CPR), this certificate applies to the construction products

ACCESSORI PER SERRAMENTI - DISPOSITIVI ELETTROMAGNATICI FERMOPORTA PER PORTE GIREVOLI
BUILDING HARDWARE - ELECTRICALLY POWERED HOLD-OPEN DEVICES FOR SWING DOORS

classificati come indicato in allegato
classified as specified in the annex

immessi sul mercato da
placed on the market by
OPERA S.r.l.
Via Portogallo, 43 - 41122 MODENA (MO) - Italia

e prodotti nello stabilimento
and produced in the manufacturing plant
Via Portogallo, 43 - 41122 MODENA (MO) - Italia

Questo certificato attesta che tutte le disposizione riguardanti la valutazione e la verifica della costanza della prestazione secondo il sistema 1 e le prestazioni definite nell'allegato ZA della norma
This certificate attests that all provisions concerning the assessment and verification of constancy of performance at system 1 and the performances described in annex ZA of the standard
EN 1155:1997/A1:2002/AC:2006

sono applicate e che
are applied and that
i prodotti sopra indicati ottemperano a tutti i requisiti prescritti
the above-mentioned products fulfil all the prescribed requirements

Bellaria-Igea Marina - Italia, 12 novembre 2021
Bellaria-Igea Marina - Italy, 12 November 2021

Revisione n. / *Revision No.* 7[(1)]

(1) Revisionato per aggiornamento editoriale e rapporti di prova
(1) Revised by editorial and test reports update

Il Direttore Tecnico
Technical Director

L'Amministratore Delegato
Chief Executive Officer

Il presente documento è composto da n. 1 pagina e n. 1 allegato (in formato bilingue (italiano e inglese), in caso di dubbio è valida la versione in lingua italiana), è stato emesso la prima volta in data 20 Ottobre 2004 e rimarrà valido sino a che la norma armonizzata rimanga valida o le condizioni di produzione in fabbrica o il suo controllo di produzione non subiscano modifiche significative. L'originale del presente documento è costituito da un documento informatico firmato digitalmente ai sensi della Legislazione italiana applicabile.
The document is made up of 1 page and 1 annex (in a bilingual format (Italian and English), in case of dispute the Italian version is the valid one), and it is issued on 20 October 2004 and will remain valid as long as the harmonized standard remains valid or the manufacturing conditions in the plant or the factory production control are not subject to significant changes. The original of this document consists of an electronic document digitally signed pursuant to the applicable Italian regulation.

Pagina 1 di 1 / *Page 1 of 1*

ISTITUTO GIORDANO S.p.A. Via Gioacchino Rossini, 2 - 47814 Bellaria-Igea Marina (RN) - Italia - Tel. +39 0541 343030 - istitutogiordano@giordano.it - www.giordano.it
Cap. Soc. € 1.800.000 i.v. - R.E.A. c/o C.C.I.A.A. (RN) 159766 - Registro Imprese Romagna (Forlì-Cesena e Rimini) e CFIP. IVA n. 00549540409

Certificato EN1155

FIRE DOOR EXAMPLE

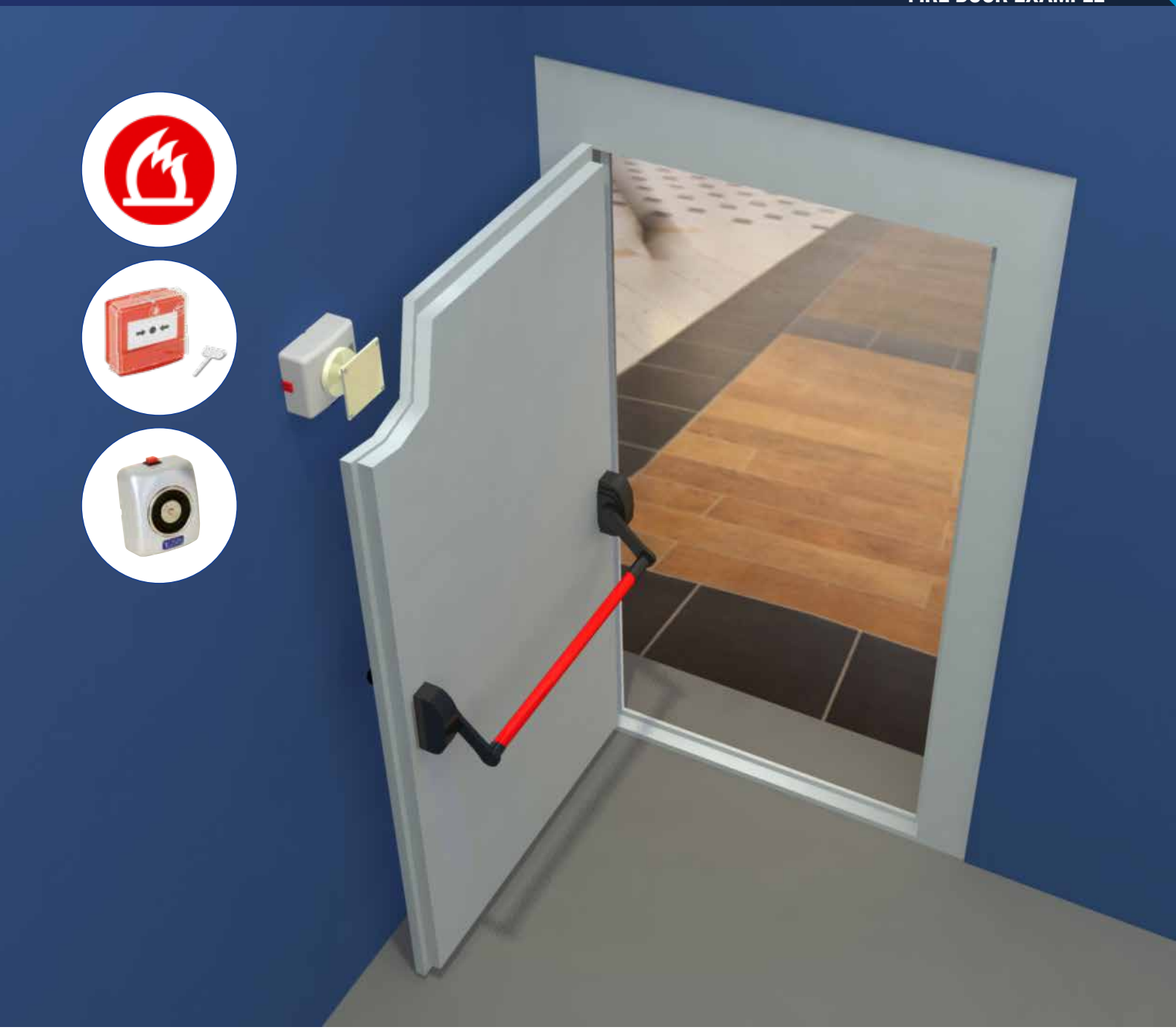

FIRE DOOR EXAMPLE

- Version for wall or floor fixing
- Fixed or swinging striking plates
- Abs, anodized aluminium or steel box
- CE-EN1155 certification at the upper level
- 12 - 24 - 48V operating voltage

	Art.	Description	€
		HOLD OPEN ELECTROMAGNET Electromagnetic body with rear M8 fixing hole Electromagnet dimensions: diameter (mm) 50 x 30 Operating voltage: 24 Vdc - Absorbed current: 70 mA Holding force: > 55 Kg. with electromagnet coupled with its Armature plate - (upon request reduced force to 20 Kg. See variant at page 72) -	
	01620	Electromagnet only	37,10
	01620I	Electromagnet complete with Armature plate 55mm diameter	44,60
		Use: door holding electromagnet for swing or sliding counterweighted doors	
		HOLD OPEN ELECTROMAGNET Electromagnet body with fixing plate Fixing plate dimensions (mm): 65 x 65 x 3 Electromagnet dimensions: diameter (mm) 50 x 39 Operating voltage: 24 Vdc - Absorbed current: 70 mA Holding force: > 55 Kg. with electromagnet coupled with its Armature plate - (upon request reduced force to 20 Kg. See variant at page 72) Spring for anti-residual magnetism on the electromagnet body	
	01630	Electromagnet only	41,10
	01630I	Electromagnet body with fix Armature plate item 01800Z	58,60
		Use: door holding electromagnet for swing or sliding counterweighted doors	
		HOLD OPEN ELECTROMAGNET Electromagnet body with rear M8 fixing hole Electromagnet dimensions: diameter (mm) 70 x 38 Operating voltage: 24 Vdc - Absorbed current: 70 mA Holding force: > 140 Kg. (with electromagnet coupled with its Armature plate)	
	01820	Electromagnet only	58,10
	01820I	Electromagnet complete of armature plate 70 mm diameter	74,70
		Use: door holding electromagnet for swing or sliding counterweighted doors	
		HOLD OPEN ELECTROMAGNET Electromagnet body with fixing plate Fixing plate dimensions (mm): 65 x 65 x 3 Electromagnet dimensions: diameter (mm) 70 x 38 Operating voltage: 24 Vdc - Absorbed current: 70 mA Holding force: > 140 Kg. Spring for anti-residual magnetism on the electromagnet body	
	01830	Electromagnet only	62,20
	01830I	Electromagnet complete of armature plate 70mm diameter	94,80
		Use: door holding electromagnet for swing or sliding counterweighted	
	17003A	**HOLD OPEN ELECTROMAGNET** Version: **wall mount** Cylindrical body on painted aluminium base Magnet with resin coated coil Base and Armature plate dimensions (mm): 90 x 90 x 6 Magnet dimensions: diameter (mm) 80 x 47 h. Armature plate dimensions: diameter (mm) 80 x 22 h. Operating voltage: 24 Vdc - Absorbed current: 250 mA Holding force: 180 Kg. Residual anti-magnetism pin on the Armature plate Provided with Armature plate fixed on galvanized steel base **Use:** door holding electromagnet for swing or sliding counterweighted doors	205,20

On request: see variants on page. 72

HOLD OPEN ELECTROMAGNETS FOR FIRE DOORS FIRE CONTROL SERIES

Art.	Description	€
18003	**HOLD OPEN ELECTROMAGNET** Version: **flush wall mount** Front plate in stainless steel Front dimensions (mm): 85 x 85 x 2 Electromagnet dimensions: diameter (mm) 50 x depth 35 Operating voltage: 24 Vdc - Absorbed current: 70 mA Holding force: > 55 Kg. (on request reduced force to 20 Kg. - LF version, see page 72) Residual anti-magnetism pin on the electromagnet body Screw connection connector with anti-disturb varistor Provided without Armature plate (to be ordered separately - see page 70) **With push button release** **Compliance:** UNI EN 1155 **Use:** door holding electromagnet for swing fire doors	38,90

01780	**BOX FOR FLUSH MOUNT ELECTROMAGNET** Body: in silver coloured aluminium Dimensions (mm): 85.5 x 85.5 x 38.5 mm. **Use:** box for flush or application mount for electromagnet item 18003	31,20

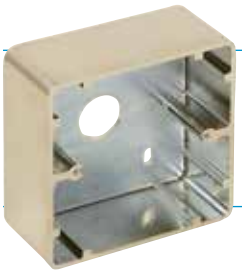

HOLD OPEN ELECTROMAGNET
Version: **floor mount**
Body in black or white painted steel - see dimensions at page 68
Operating voltage: 24 Vdc - Absorbed current: 70 mA
Holding force: > 55 Kg. (on request reduced force to 20 Kg. - LF version, see page 72)
Residual anti-magnetism pin on the electromagnet body
Screw connection connector with anti-disturb varistor
Provided without Armature plate (to be ordered separately - see page 70)

	With push button release	
18005	Body in black painted finish	132,00
18005B	Body in white painted finish	132,00

Compliance: UNI EN 1155
Use: door holding electromagnet for swing fire doors

HOLD OPEN ELECTROMAGNET
Version: **Wall mount**
Corpo in ABS con base in acciaio zincato
Body in ABS with galvanized steel base
Nickel plated magnet block
See dimension at the bottom of the page
Operating voltage: 24 Vdc - Absorbed current: 70 mA
Fixed Holding force: > 55 Kg. (on request reduced force to 20 Kg. - LF version, see page 72)
Residual anti-magnetism pin on the electromagnet body
Connector with anti-disturb varistor
Provided without Armature plate (to be ordered separately - see page 70)

	Without push button release	
19000	Body in black colour ABS	37,30
19000GC	Body in grey colour RAL 7035 ABS	37,30
	With push button release	
19001	Body in black colour ABS	39,60
19001GC	Body in grey colour RAL 7035 ABS	39,60
Art + R	Holding force adjustable from 10-50 Kg.- (i.e. 19001R)	+ 10,30
Art + DV	Dual voltage - automatic voltage selection 24/48Vdc and manual selection of the desired holding force 20/55Kg	+ 10,00

Compliance: UNI EN 1155
Use: door holding electromagnet for swing fire doors

On request: see variants on page. 72

Art.	Description	€
	HOLD OPEN ELECTROMAGNET Version: **Wall mount** Body in anodized aluminium with base in galvanized steel Nickel plated magnet block See dimensions at the bottom of the page Operating voltage: 24 Vdc - Absorbed current: 70 mA Fixed Holding force: > 55 Kg. (on request reduced force to 20 Kg. - LF version, see page 72) Residual anti-magnetism pin on the electromagnet body Connector with anti-disturb varistor Provided without Armature plate (to be ordered separately - see page 70)	
	With push button release	
19002	Body in silver colour anodized aluminium	**41,50**
19002N	Body in black colour anodized aluminium	**41,50**
19002GD	Body in gold colour anodized aluminium	**46,70**
Art + R	Holding force adjustable from 10-50 Kg. - (i.e. 19002R)	**+ 10,30**
Art + DV	Dual voltage - automatic voltage selection 24/48Vdc and manual selection of the desired holding force 20/55Kg	**+ 10,00**

Note: on request without push button release
Compliance: UNI EN 1155
Use: door holding electromagnet for swing fire doors

DUAL VOLTAGE VERSION - DV

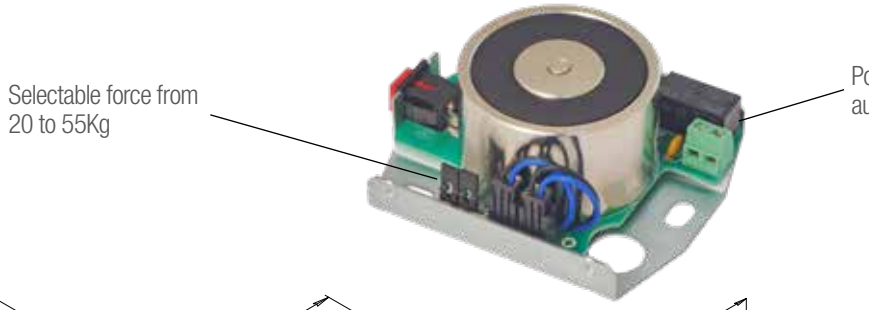

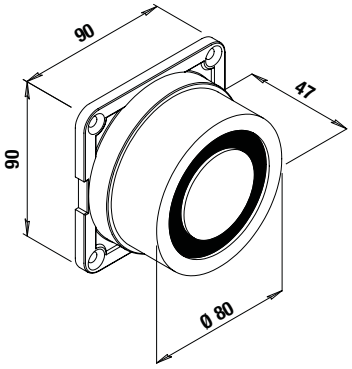

Art. 17003A

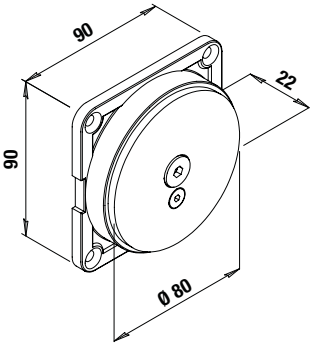

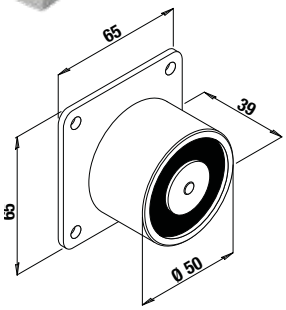

Series 01620-01630

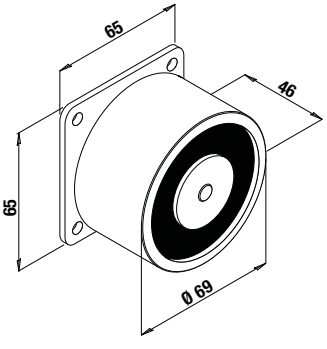

Series 01820-01830

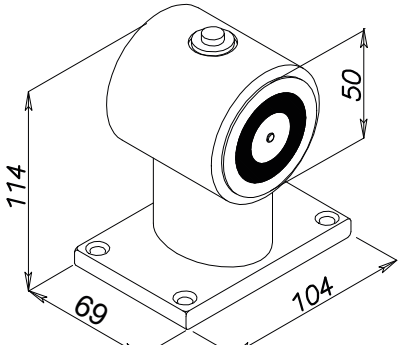

Series 18005

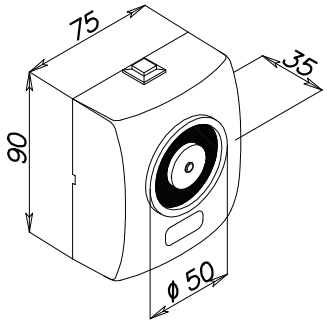

Series 190

On request: see variants on page. 72

Art.	Description	€

18100

HOLD OPEN ELECTROMAGNET — 80,30

Version: **Wall mount**
Box in black painted steel
See dimensions at the bottom of the page
Operating voltage: 24 Vdc / Absorbed current: 70 mA
Holding force: > 140 Kg.
Residual anti-magnetism pin on the electromagnet body
Connector with anti-disturb varistor
Provided without Armature plate (to be ordered separately - see page 70)
Without push button release
Compliance: UNI EN 1155
Use: door holding electromagnet for swing fire doors

18101

HOLD OPEN ELECTROMAGNET — 82,90

Version: **Wall mount**
Box in black painted steel
See dimensions at the bottom of the page
Operating voltage: 24 Vdc / Absorbed current: 70 mA
Holding force: > 140 Kg.
Residual anti-magnetism pin on the electromagnet body
Connector with anti-disturb varistor
Provided without Armature plate (to be ordered separately - see page 70)
With push button release
Compliance: UNI EN 1155
Use: door holding electromagnet for swing fire doors

HOLD OPEN ELECTROMAGNET

Steel base
Fixing plate dimensions (mm) 65 x 65x 3)
See dimensions at the bottom of the page
Diameter mm 70 x 41 (ref. 18104)
Operating voltage: 24 Vdc - Absorbed current: 70 mA
Holding force: > 140 Kg.
Residual anti-magnetism pin on the electromagnet body
Connector with anti-disturb varistor

18004	Holding force: 55Kg	**77,70**
18104	Holding force: 140Kg	**99,60**
18104RES	Holding force: 140Kg	**140,00**

Provided without Armature plate (to be ordered separately - see page 70)
Compliance: UNI EN 1155
Use: door holding electromagnet for swing or sliding counterweighted fire doors

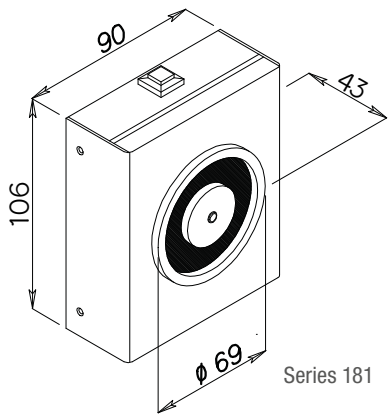

Series 181

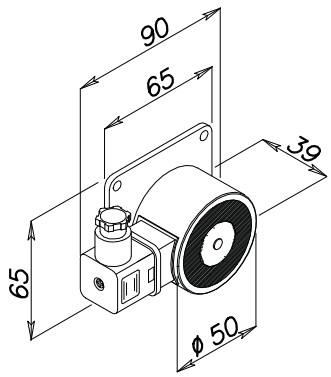

Series 18004

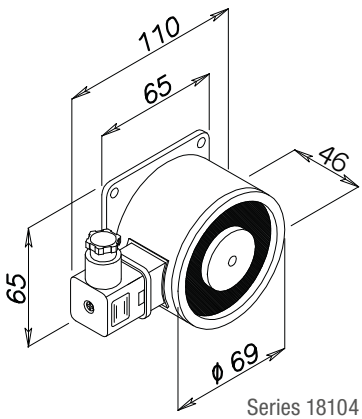

Series 18104

On request: see variants on page. 72

Art.	Description	€
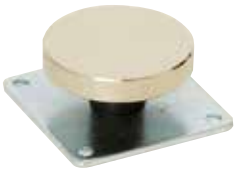		
01800Z	**FIXED ARMATURE PLATE** Fixed Armature plate for electromagnets series 190 Base in galvanized steel See dimensions at page 71 Armature plate diameter (mm): 55	16,20
01805Z	**SWINGING ARMATURE** Swinging Armature plate for electromagnets series 190 Base in galvanized steel See dimensions at page 71 Armature plate diameter (mm): 55	20,30
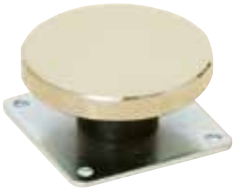		
01810Z	**FIXED ARMATURE PLATE** Fixed Armature plate for electromagnets series 181 Base in galvanized steel See dimensions at page 71 Armature plate diameter (mm): 70	32,60
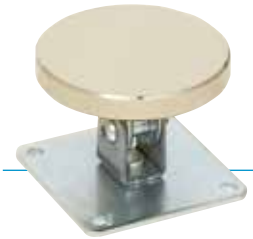		
01815Z	**SWINGING ARMATURE** Swinging Armature plate for electromagnets series 181 Base in galvanized steel See dimensions at page 71 Armature plate diameter (mm): 70	36,80
	NON ADJUSTABLE MOUNTING SUPPORT FOR ELECTROMAGNET Bracket not extendable Body in painted steel Bracket (square mm) 35 x 35 for horizontal fixing to wall or vertical to floor of the fire door electromagnets Plate for fixing of the electromagnets adjustable to 180° See dimensions at page 71	
01740F	Black painted steel	49,20
01740BF	White painted steel (Ral 9010)	49,20
	Use: for electromagnets series 181, 190	
	TELESCOPIC "WALL" OR "FLOOR" MOUNTING SUPPORT FOR ELECTROMAGNET Extendable bracket (square mm) 40 x 40 for horizontal fixing to wall or vertical to floor of the fire door electromagnets Body in black painted steel Plate for fixing of the electromagnets adjustable to 180° Overall dimension	
01740	Black colour - length (mm) 140 (adjustable up to 220 mm.)	66,40
01740B	White colour - length (mm) 140 (adjustable up to 220 mm.)	66,40
01740M	Black colour - length (mm) 218 (adjustable up to 360 mm.)	72,20
	Use: for electromagnets series 181, 190	
05115	**RELEASE/RESET PUSH BUTTON** Box in grey colour plastic material for wall mount Dimensions (mm): 81 x 67 x 55 N.O. / N.C. push button contact **Use:** push button for remote release of the retainer electromagnets or for silencing reset of the fire control panel Art. 52002	24,90

SWINGING PLATES AND BRACKETS DRAWINGS

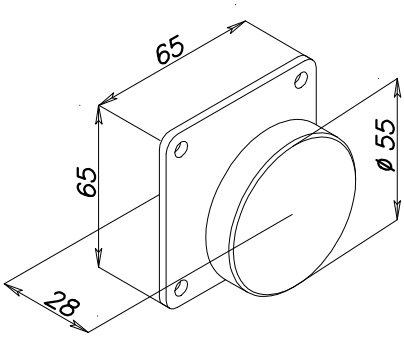

01800Z

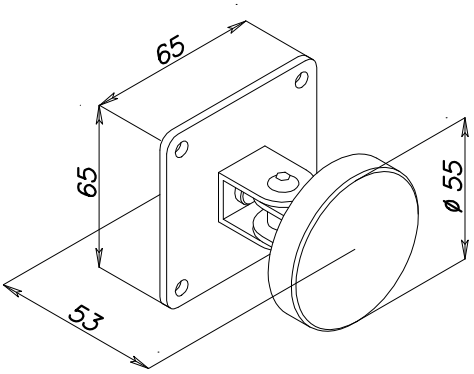

01805Z

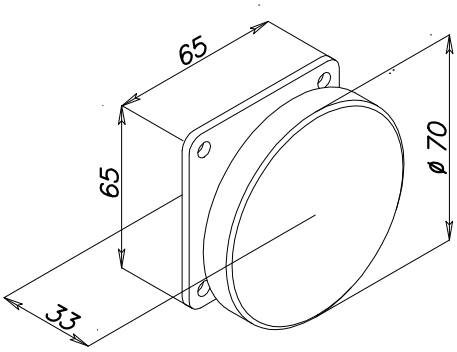

01810Z

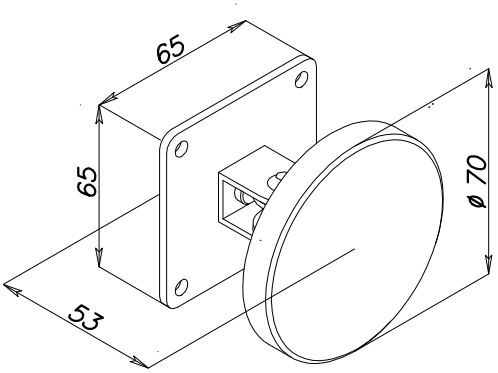

01815Z

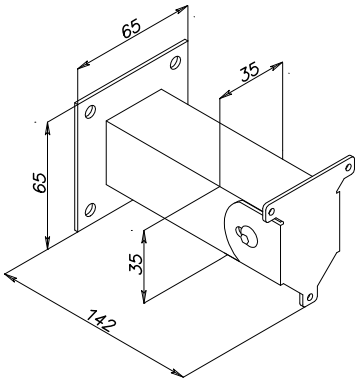

01740F

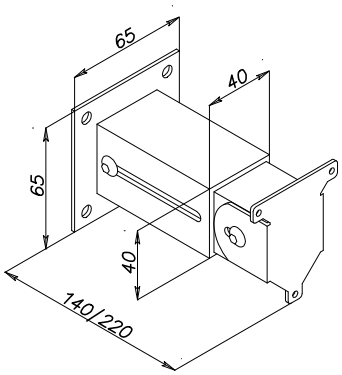

01740

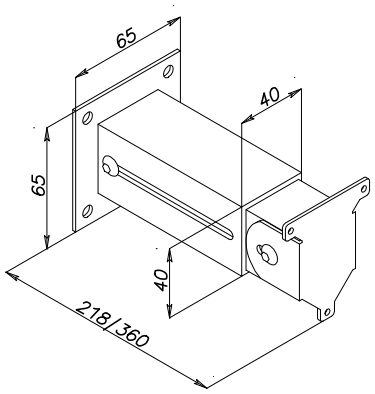

01740M

WALL MOUNTING BRACKET EXAMPLE

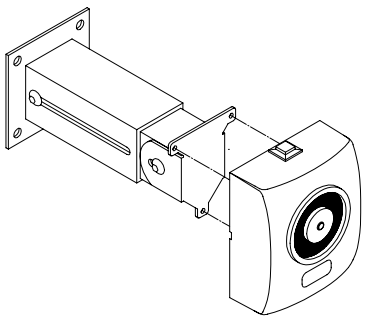

FLOOR MOUNTING BRACKET EXAMPLE

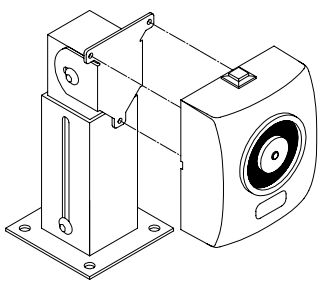

	Art.	Description	€
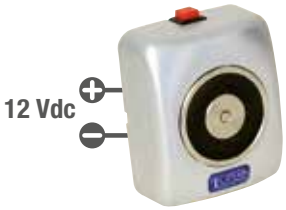	Art. + LV	**12 VDC POWER** Special coil for voltage 12 Vdc Absorbed current: 120 mA Part no. electromagnet + LV (i.e. 19001LV) **Use:** for all electromagnets of 01620, 01630, 180, 190 series	7,10
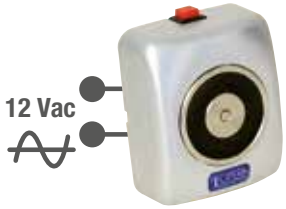	Art. + ALV	**12 VAC POWER** Special coil and rectifier circuit for operation of the electromagnet at 12 Vac Absorbed current: 130 mA Part no. electromagnet + ALV (i.e. 19001ALV) **Use:** for all electromagnets of 01620, 01630, 180, 190 series	17,90
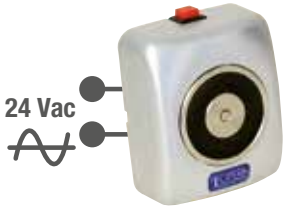	Art. + AC	**24 VAC POWER** Rectifier circuit for voltage at 24 Vac Absorbed current: 100 mA Part no. electromagnet + AC (i.e. 19001AC) **Use:** for all electromagnets of Fire Control series	10,30
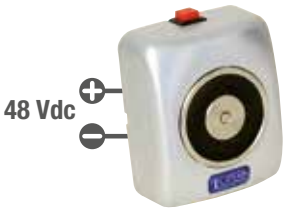	Art. + HV	**48 VDC POWER** Special coil for voltage at 48 Vdc Absorbed current: 40 mA Part no. electromagnet + HV (i.e. 19001HV) **Use:** for all electromagnets of 180, 190 series	7,10
	Art. + LF	**REDUCED HOLDING FORCE 20 KG.** Current reducer to bring the holding force for the standard electromagnets to 20 Kg. Part no. electromagnet + LF (i.e. 19001LF) **Use:** for all electromagnets of 01620, 01630, 180, 190 series	5,00
	Art. + F	**SCREW CONNECTOR** Power connector with screw terminal block and anti-disturb varistor fixed on the body of the electromagnet Part no. electromagnet + F (i.e. 01630F) **Use:** for all electromagnets of 01620, 01630, 01820, 01830 series	4,00
	Art. + M	**STATUS SENSOR** Internal magnetic sensor with N.O. contact for indication of attracted Armature plate Part no. electromagnet + M (i.e. 19001M) **Use:** for all electromagnets of 01620, 01630, 180, 190 series	35,00

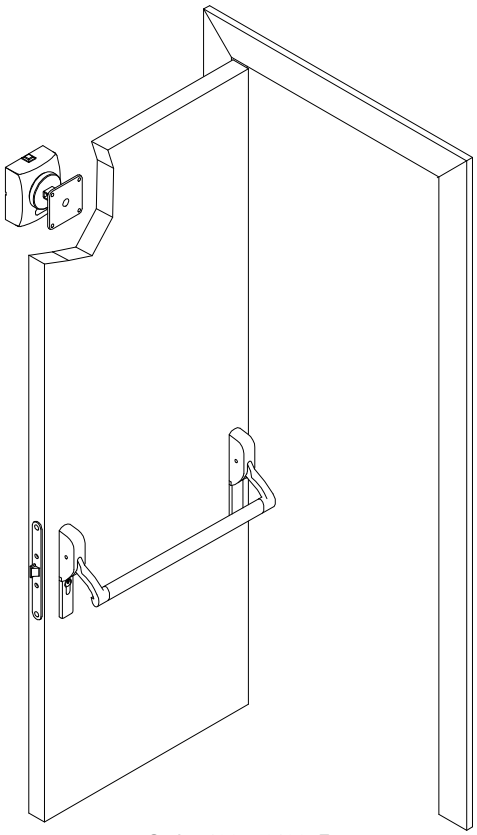

Series 190 + 01805Z

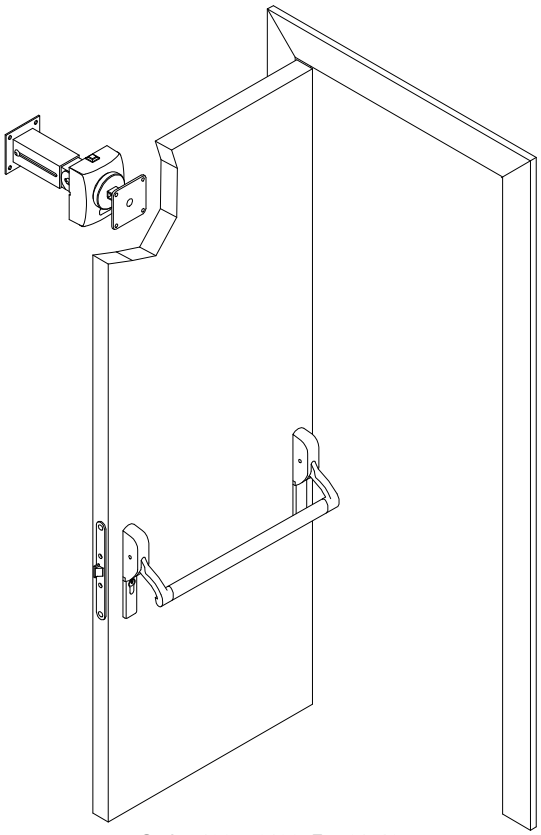

Series 190 + 01805Z + 01740

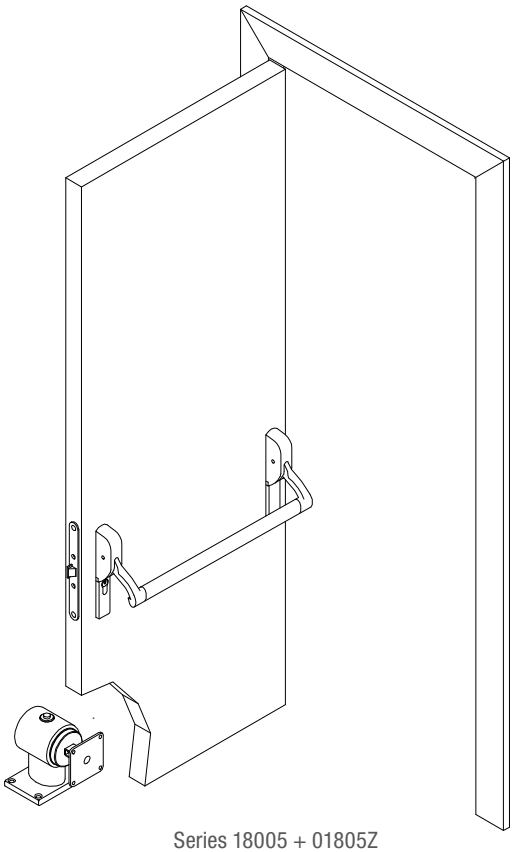

Series 18005 + 01805Z

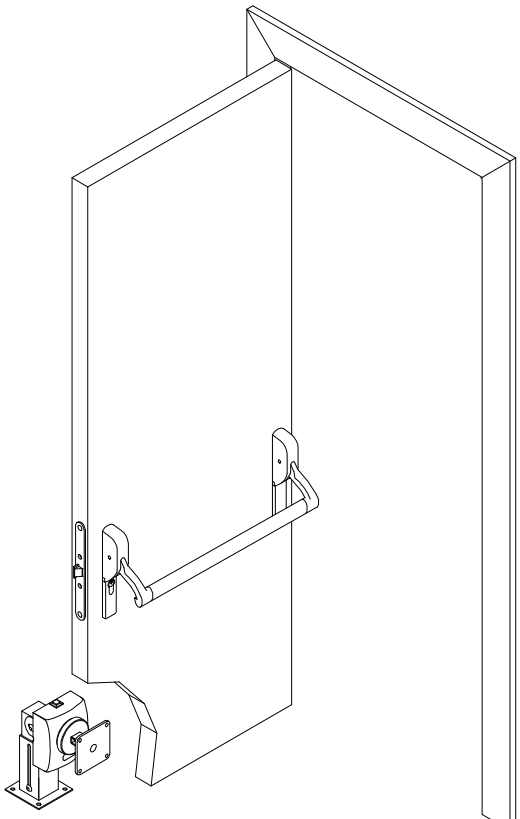

Series 190 + 01805Z + 01740

The **hydraulic dampers** allow the automatic reclosure of a sliding fire door to be braked. After the critical moment of departure is over, the velocity of the door increases progressively and proportionally to the travel period and to its own weight. In emergency situations, the energy release could cause serious damage to people or things that may be in the way. The hydraulic regulator allows the closure velocity to be stabilized in a constant way

Art.	Description	€
	HYDRAULIC DAMPERS Body in aluminium See dimensions at the bottom page Pulley in steel, diameter (mm) 60 for insertion of a trapezoidal belt (special pulleys available on request) Hydraulic, free sliding clockwise system and refrained anticlockwise (reversible). Screw adjustment of the refrained system. Working temperature: -15° +70°C Side M8 fixing for insertion on support brackets (sold separately)	
60000	Steel pulley version for V-belt	**358,10**
6000VLC	Vulcanized rubber pulley version for steel cable with a diameter of 3 mm	**370,00**
	Use: used to limit the run speed of sliding or counterweighted fire doors	

Art.	Description	€
60001	**3 PULLEY VERSION HYDRAULIC DAMPER** Body in aluminium See dimension at the bottom page Pulley in steel with vulcolan insert, diameter (mm) 60 for insertion of a 3 mm. diameter steel cable Hydraulic, free sliding clockwise system and refrained anticlockwise (reversible). Screw adjustment of the refrained system. Working temperature: -15° +70°C Side M8 fixing for insertion on support brackets (sold separately)	**380,60**
	Use: used to limit the run speed of sliding or counterweighted fire doors	

FIXING BRACKET

On demand: Fixing bracket for dampers made according to customers need.

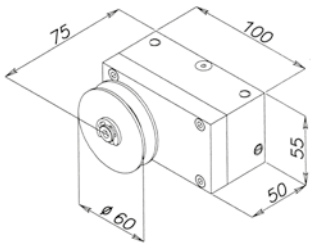

60000 Series

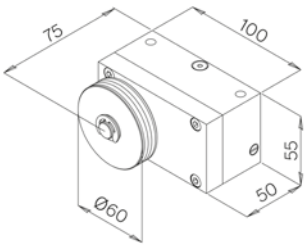

60000VLC Series

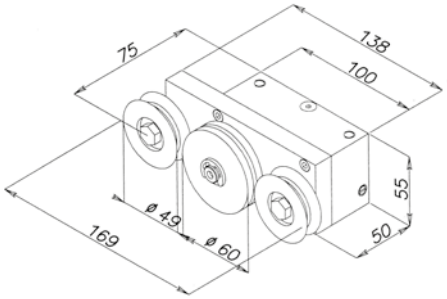

60001 Series

The **hydraulic shock absorbers** are used as stops to slow the impact and therefore facilitate the closure of a sliding door thanks to the braking effect deriving from the passage of the oil through holes and slots made in the cylindrical body. The degree of braking can be increased or decreased through a regulation system by opening or closing the passages of the oil through the piston. The stem of the shock absorber, once compressed, automatically rearms upon the reopening of the door through a special magnet, preparing itself for a new cycle.

Art.	Description	€
	SHORT HYDRAULIC SHOCK ABSORBER Galvanized steel cylindrical body Diameter of the body and magnet: 28 mm Minimum total length including magnet: 196 mm Total length in maximum extension: 252 mm Stroke: 56 mm Hydraulic shock absorbing system Adjustment of the hardness of the shock absorber Fixing through threaded terminals M 16 x 1 Safety valve to release the brake fluid in the case of fire and to prevent the spontaneous reset of the stem by thermal expansion of the liquid (only Art. 65000)	
65000	With safety valve **Use:** closure impact shock absorber for sliding fire doors with counterweights	**129,20**
	LONG HYDRAULIC SHOCK ABSORBER Galvanized steel cylindrical body Diameter of the body and magnet: 28 mm Minimum total length including magnet: 300 mm Total length in maximum extension: 430 mm Stroke: 130 mm Hydraulic shock absorbing system Adjustment of the hardness of the shock absorber Fixing through threaded terminals M 16 x 1 Safety valve to release the brake fluid in the case of fire and to prevent the spontaneous reset of the stem by thermal expansion of the liquid	
65001	With safety valve **Use:** closure impact shock absorber for sliding fire doors with counterweights	**194,40**

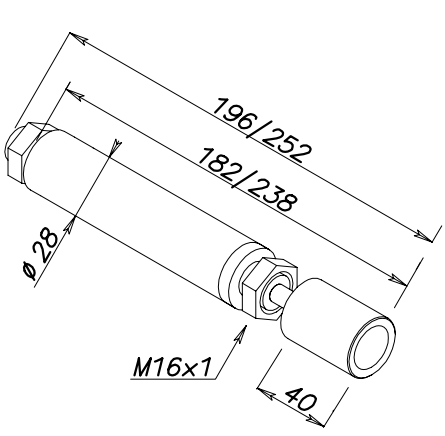

65000 Series

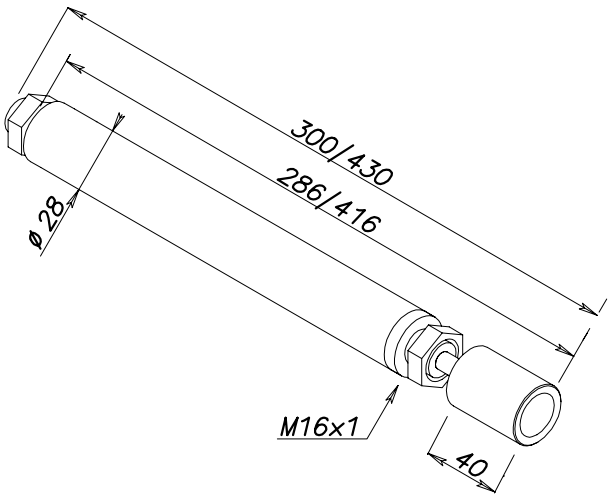

65001 Series

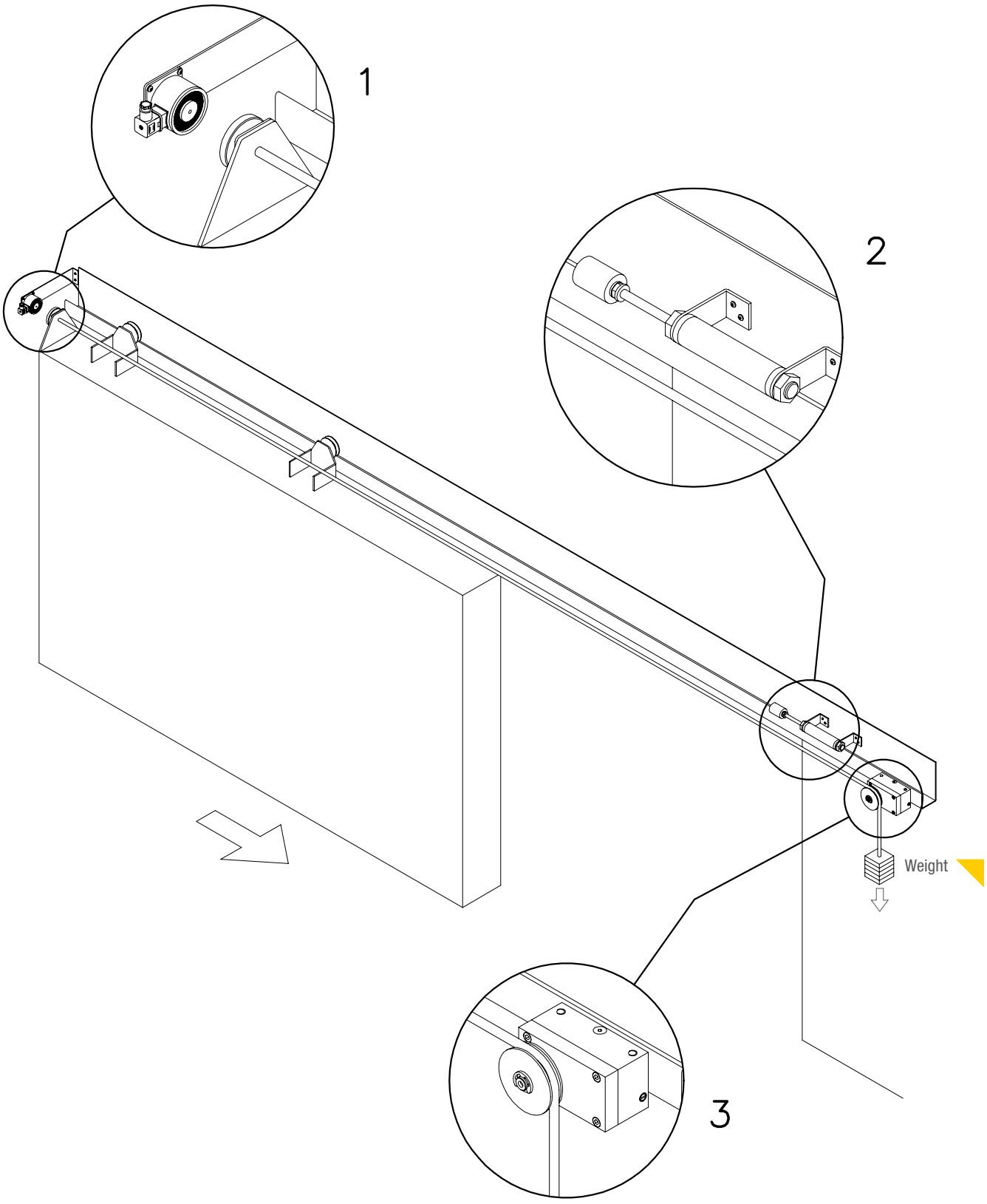

LEGENDA

1 Door retainer
2 Shock absorber
3 Hydraulic damper

Art.	Description	€
52002	**SINGLE ZONE FIRE ALARM PANEL** Box in beige ABS Dimensions (mm): 240 x 150 x 48 Operating voltage: 1Primary, 230 Vac 50-60Hz mains 2Auxiliary provided by 2 12Vdc 1.1/1.3 Ah batteries (item 00112 compulsory and sold separately) See page 63 Operational zones: single Main panel with LED to indicate operational status of the panel with the following displays: - fire alarm - mains power/power failure - auxiliary power/power failure (battery) - panel general fault - detector(s) line fault - remote alarm activation call point(s) line fault - manual out of order status of the panel - sounder line fault - electromagnets power status - system fault Manual out of order push button of the sounder line and the call point and detector lines; Alarm conditions, fault or out of order reset push button Key switch for access to the panel's Level 2 functions Inputs (on terminal block): Heat and smoke detector(s) line (up to 8 units, compulsory, sold separately and EN54-5 (heat) / EN54-7 (smoke) certified, Art. 05203A or 05204A) See page 78 Remote alarm activation call point(s) line (up to 5 units, min. 2 compulsory, sold separately and EN54-11 certified Art. 05110R) See page 79 Remote manual electromagnetic release button(s) line External alarm buzzer silencing/reactivation push button following alarm condition (Art. 05115) See page. 78 Outputs (on terminal block): Electromagnets line (up to 4 - 24 Vdc - Max. 300 mA totals) Output for connection of up to 2 external sounders (additional electronic sounder compulsory, sold separately and EN54-3 certified, Art. 05207) operating in parallel to the internal sounder of the panel. See page 64 1 relay output on COM./N.O./N.C contacts (2 A) for external indication of out of order/fault status of the panel Other features: Signalling of the presence/absence of mains power Signalling of the presence/absence of auxiliary power (battery) Battery status monitoring Silencing of panel alarm signalling Reactivation of alarm signalling after a new alarm signal from any of the detection devices Possibility of placing the panel out of service manually for system maintenance Identification and signalling (visual and acoustic) of the presence of detector and remote fire alarm activation call point lines Possibility of delayed power cut to the electromagnets **Compliance:** EN54-2 (panel) and EN54-4 (power supply)	314,80

CERTIFICATO DI CONFORMITA' CE

0051 – CPD – 0264

CENTRALE DI CONTROLLO E DI SEGNALAZIONE PER SISTEMI DI RIVELAZIONE E DI SEGNALAZIONE D'INCENDIO PER EDIFICI CON ALIMENTATORE INTEGRATO

Designazione: 52002

OPERA S.R.L.

VIA PORTOGALLO 43
41122 MODENA MO

EN 54-2:1997+A1:2006
EN 54-4:1997 + A1:2002 + A2:2006

IMQ

Art.	Description	€
05203A	**DUAL HEAT AND SMOKE DETECTOR** Container in white ABS Dimensions (mm): 100 diameter x 52 height Operating voltage : 24 Vdc (10 – 30 Vdc) Absorption in standby 67 microA @ 24Vdc/ in alarm: 25 mA Operating temperature: - 20 to + 70 °C Operational technology: optical, heat Supplementary detector complete with base for ceiling mount, can be connected to article 52002 **Compliance:** EN54-7 (smoke) **Use:** this dual heat detector activates alarm condition in case of smoke detection or heat detection	87,10
ART. + BRA	**On demand:** relay base for connection with other systems	+ 70,30
05204A	**HEAT RATE OF RISE DETECTOR** Container in white colour plastic material Dimensions (mm): 100 diameter x 47 height Operating voltage : 24 Vdc (10 – 30 Vdc) Absorption in standby 55 mA / in alarm: 25 mA Operational technology: heat rate of rise with trigger for increases higher than 30°C per minute. Operating temperature: - 20 to + 70 °C Supplementary detector complete with base for ceiling mount, can be connected to article 52002 **Compliance:** EN54-5 (heat) **Use:** this heat rate of rise detector triggers an alarm condition in case of detection of a rapid rise in temperature	64,70
ART. + BRA	**On demand:** relay base for connection with other systems	+ 70,30
05206A	**TEST SPRAY FOR SMOKE DETECTORS** Spray bottle to check correct operation of the smoke detectors Art. 05203	67,60
05207	**ELECTRONIC SOUNDER** Container in red colour plastic material Dimensions (mm): 93 diameter x 63 height Operating voltage: 12 / 24 Vdc - 15 mA Sound power: Max 114 dB @ 24 Vdc Working temperature -25° +70° C IP rating: P54 32 tones selectable by internal dip switches. **Compliance:** EN54-3 **Use:** electronic alarm to be used with single zone panel 52002	92,50
05115	**RELEASE/RESET PUSH BUTTON** Box in grey colour plastic material for wall mount Dimensions: mm 81x67x55 N.O / N.C push button contact **Use:** push button for release of the retainer electromagnets or for silencing reset of the fire control panel Ref. 52002	24,90

Art.	Description	€
05110R	**CALL POINT FOR ALARM ACTIVATION WITH PRESSURE, WITH MANUAL RESET** ABS box Dimensions: 99 x 95 x 43 mm C/N.O internal exchange contact. N.C on demand Manual reset of the contact Degree of protection: IP41 Transparent Plexiglas cover for the protection of the activation button of the case Red box (for the connection to fire prevention systems) **Use:** Ipressure on the plastic front panel plate activates the switching of the electrical contact **Compliance:** EN54-11 (only item 05110R)	29,90
00112	**BATTERIES** 12 Vdc rechargeable lead battery Dimensions: 97 x 42 x 53 mm Power: 1.2 A for item. 52002	43,90

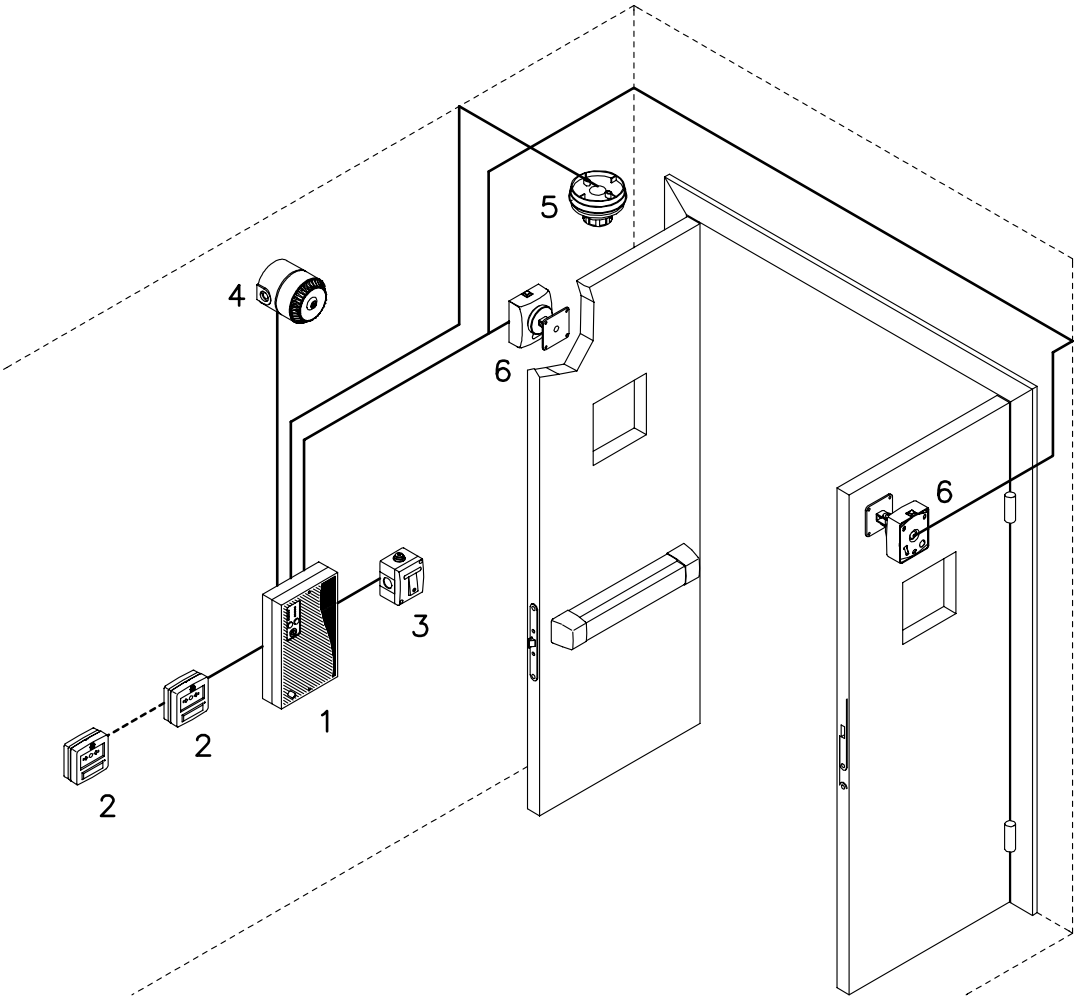

LEGENDA

1 Single zone controller
2 Activation switches
3 Silence switch
4 Alarm
5 Detector
6 Electromagnets

SMART TRIM

- ELECTRONIC HANDLE FOR FIRE DOORS AND EMERGENCY EXITS
- TO BE MATCHED WITH ALL FIRE DOORS LOCKS
- CAN BE MOUNTED ON NARROW METAL FRAMES
- ELECTRONICS CONTROL UNIT WITH INTERNAL MICROPROCESSOR
- OPTIC AND ACOUSTIC INTEGRADED SIGNALLING

SMART TRIM

www.opera-italy.com

Fire doors version

Emergency exits version

PLUS

- Elegant design in mat chrome satin finish
- To be matched with rim type panic bars
- Internal electronics with micro switch
- Blue/White LED for floor lighting
- Power 12/24 Vac/dc
- Adjustable timer
- Activated bar signalling contact

ELECTRIC HANDLE
FOR MORTICE LOCKS

ELECTRIC HANDLE
FOR RIM PANIC BARS

PLUS EXAMPLE

- Version for fire doors
- Version for panic bars
- Opening by internal button
- To be matched with intercom and access control systems

SEE VIDEO

Matt chrome

White

Black

Art.	Description	€
	ELECTRICALLY OPERATED HANDLE **For locks for full metal and glass fire proof doors** Brushed metal body and handle Case-hardened steel internal mechanisms Dimensions: mm 234 x 48,5 x 38, handle height mm 84 Distance between cylinder and handle mm 72 (on demand 85mm, 92mm or full blank with no hole). Handle panel mm 9 (on request mm 8) Mounting on the door, no additional holes required Selectable handle panel rotation 45° or 60° Power supply 12/ Vac/dc – 24Vdc Absorbed current: at 12V – 700 mA peak/ 500 mA holding at 24V – 300 mA peak/200 mA holding Electronic opening holder Red LED (handle disabled for 40610 version) and green (handle enabled for 40810 version) **VERSION WITHOUT CLOSING TIME DELAY** **Use:** replacement of traditional mechanical handle mounted outside door. The handle, normally free turning, can be enabled by de-energizing (P/N 40610 version) or energizing (P/N 40810 version) through a button contact or access control system. Action is limited to the duration of the impulse.	
40610	Fail safe – enabled with no power – Matt chrome plated	**471,60**
40610B	Fail safe – enabled with no power – White painted (RAL 9010)	**457,30**
40610N	Fail safe – enabled with no power – Black painted (RAL 9005)	**457,30**
40810	Fail secure – disabled with no power – Matt chrome plated	**471,60**
40810B	Fail secure – disabled with no power – White painted (RAL 9010)	**457,30**
40810N	Fail secure – disabled with no power – Black painted (RAL 9005)	**457,30**
	VERSION WITH CLOSING TIME DELAY Additional features over the previous version: Internal timer adjustable from 0-60 s (optional) Open collector output can be coupled with a micro external relay to report handle enabled (see P/N 05258) Two colours red/green LED signalling the handle status enabled or disabled Blue LED to light the bottom of door **Use**: replacement of traditional mechanical handle mounted outside door. The handle, normally free turning, can be enabled by closing a NO button contact or access control system. In this version power supply is always on	
40611	Fail safe – enabled with no power – Matt chrome plated	**549,40**
40611B	Fail safe – enabled with no power – White painted (RAL 9010)	**535,10**
40611N	Fail safe – enabled with no power – Black painted (RAL 9005)	**535,10**
40811	Fail secure – disabled with no power – Matt chrome plated	**549,40**
40811B	Fail secure – disabled with no power – White painted (RAL 9010	**535,10**
40811N	Fail secure – disabled with no power – Black painted (RAL 9005)	**535,10**
	Note: the use of split frames is required when fitting the electric handle to a panic bar through the mortice lock	
Art. + MEC	Mechanical handle (ex. art.40610MEC)	**-191,60**

Art.	Descrizione	€
Art. + DM	**DOUBLE ELECTRONIC HANDLE APPLICATION** (l.g. 40810DM) Electric handle with fixing plate for mounting two electric handles on both side of the same door. See drawing below.	+81,40

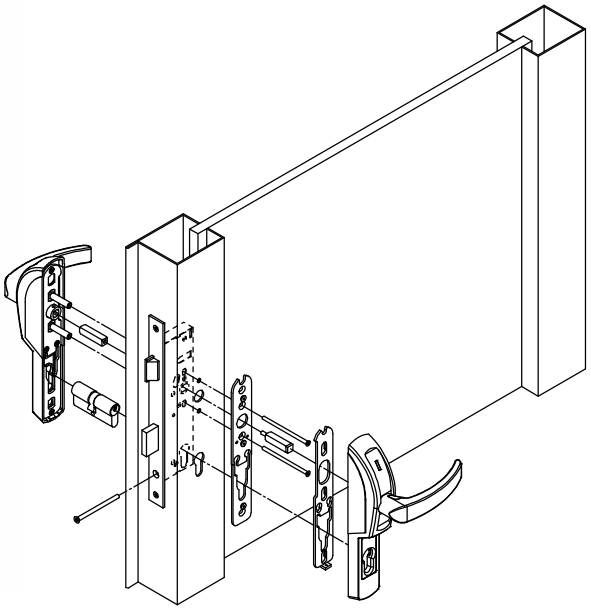

Double handle fixing sample
40810DM + 40810

00416	**FIXING PLATE FOR ELECTRICALLY OPERATED HANDLE** Body in black painted steel Dimensions (mm): 260 x 100 x 3 Fixing to the door by means of the electric handle itself without having to drill additional holes **Use:** the plate base is a supplementary accessory which can be combined with the electric handle in cases the surface contact needs to be increased (when the fixing of the electric handle tends to crush the structure of the door itself)	26,10

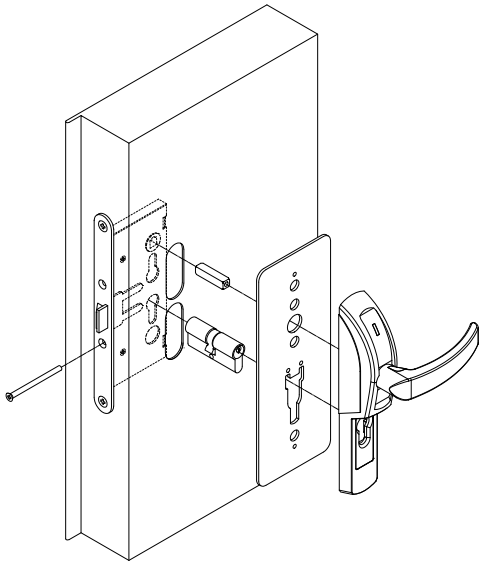

Fixing under-plate item 00406

Distance between cylinder and handle 72mm

Distance between cylinder and handle 85mm - on demand

Distance between cylinder and handle 92mm

Full plate

Matt chrome

White

Black

Art.	Description	€
	ELECTRICALLY OPERATED HANDLE **For rim panic exit bars** Brushed metal body and handle Case-hardened steel internal mechanisms Dimensions: mm 232 x 55 x 38 handle height mm 84 Handle panel can be rotated 45° or 60° depending on the type of panic bar used Mechanical enabling through flat key cylinder Mounting on the door, no additional holes required Power supply 12/24 V AC/DC Absorbed current: at 12V – 700 mA peak/ 500 mA holding at 24V – 300 mA peak/200 mA holding Electronic opening holder Red LED (handle disabled for 40620 version) and green (handle enabled 40820 version)	
	Version WITHOUT CLOSING TIME DELAY **Use:** replacement of traditional mechanical handle mounted outside door. The handle, normally free turning, can be enabled by de-energizing (P/N 40620 version) or energizing (P/N 40820 version) through a button contact or access control system. Action is limited to the duration of the impulse.	
40620	Fail safe – enabled with no power – Matt chrome plated	**548,20**
40620B	Fail safe – enabled with no power – White painted (Ral 9010)	**535,10**
40620N	Fail safe – enabled with no power – Black painted (Ral 9005)	**535,10**
40820	Fail secure – disabled with no power – Matt chrome plated	**548,20**
40820B	Fail secure – disabled with no power – White painted (Ral 9010)	**535,10**
40820N	Fail secure – disabled with no power – Black painted (Ral 9005)	**535,10**
	Version WITH CLOSING TIME DELAY Additional features over the previous version: Internal timer adjustable from 0-60 s (optional) Open collector output can be coupled with a micro external relay to report handle enabled (see P/N 05258) Two colours red/green LED signalling the handle status enabled or disabled Blue LED to light the bottom of door The handle, normally free turning, can be enabled by closing a NO button contact or access control system. In this version power supply is always kept	
40621	Fail safe – enabled with no power – Matt chrome plated	**615,30**
40621B	Fail safe – enabled with no power – White painted (RAL 9010)	**603,30**
40621N	Fail safe – enabled with no power – Black painted (RAL 9005)	**603,30**
40821	Fail secure – disabled with no power – Matt chrome plated	**615,30**
40821B	Fail secure – disabled with no power – White painted (RAL 9010	**603,30**
40821N	Fail secure – disabled with no power – Black painted (RAL 9005)	**603,30**
	TO COMBINE THE ELECTRIC HANDLE WITH A RIM PANIC BAR THE 00428 FIXING PLATE MUST BE USED	
Art. + MEC	**Extra On demand:** Mechanical handle - Matt chrome plated (i.e 40620MEC)	**-191,60**

Art.	Description	€
00428	**FIXING PLATE FOR MOUNTING THE ELECTRICALLY OPERATED HANDLE WITH RIM TYPE PANIC BAR** Galvanized steel made. See web page for panic bar compatibility – just view the on side QR Code with your smartphone app. **Use:** the fixing plate allows use of handles and electric handles 40620 – 40621 - 40820 - 40821 with different brands of panic bars.	72,30

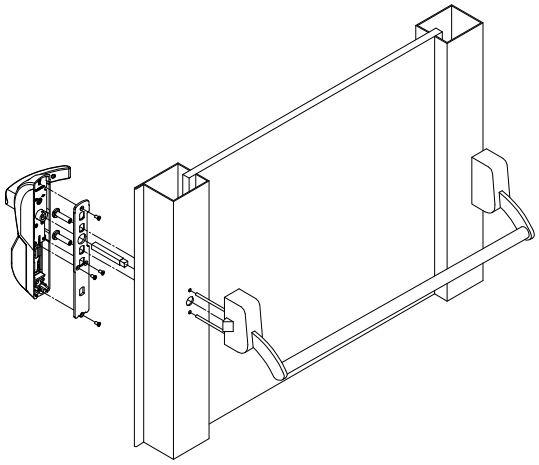

Electric handle with rim panic bar

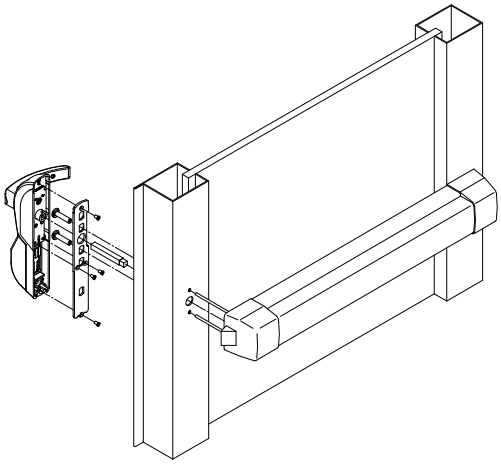

Electric handle with rim touch bar

PRODUCT SPECIFICATION CHART FOR RIM EXIT DEVICES COMPATIBILITY

ELECTRIC HANDLE ON FULL METAL FIRE DOOR

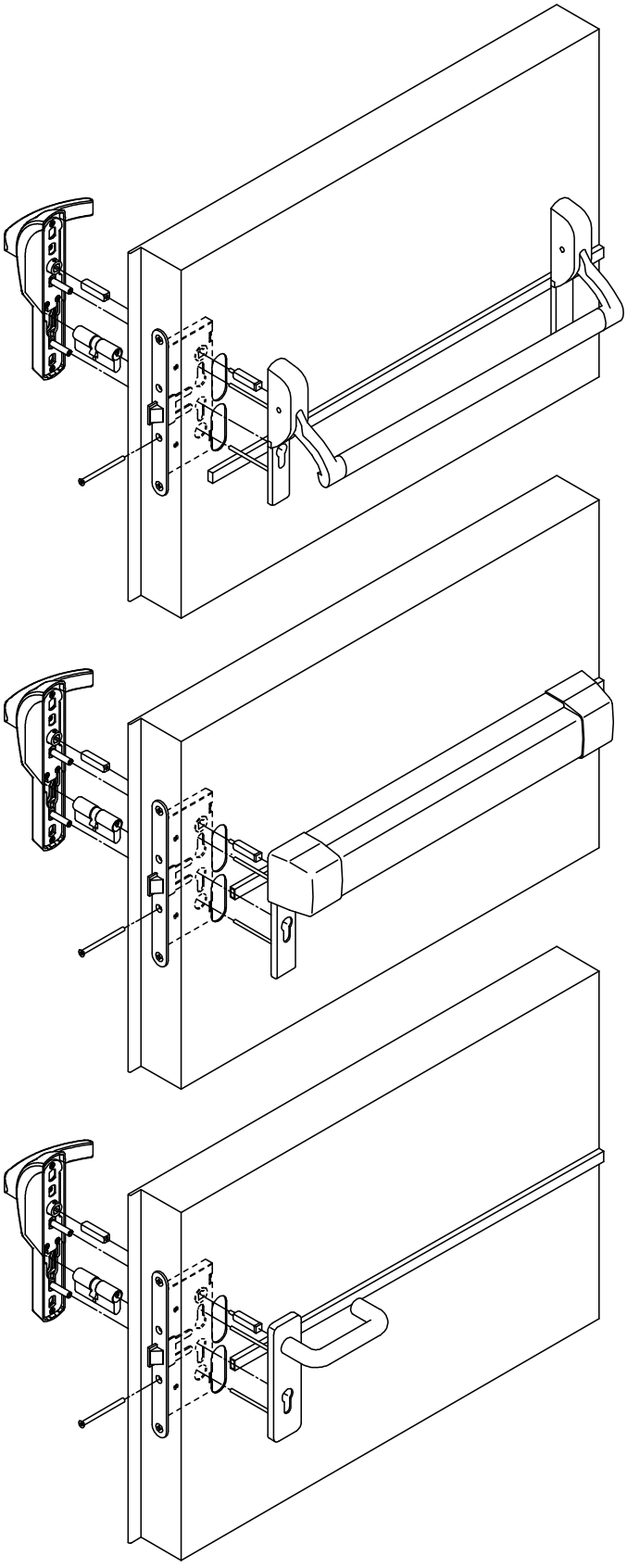

ELECTRIC HANDLE ON GLAZED DOOR

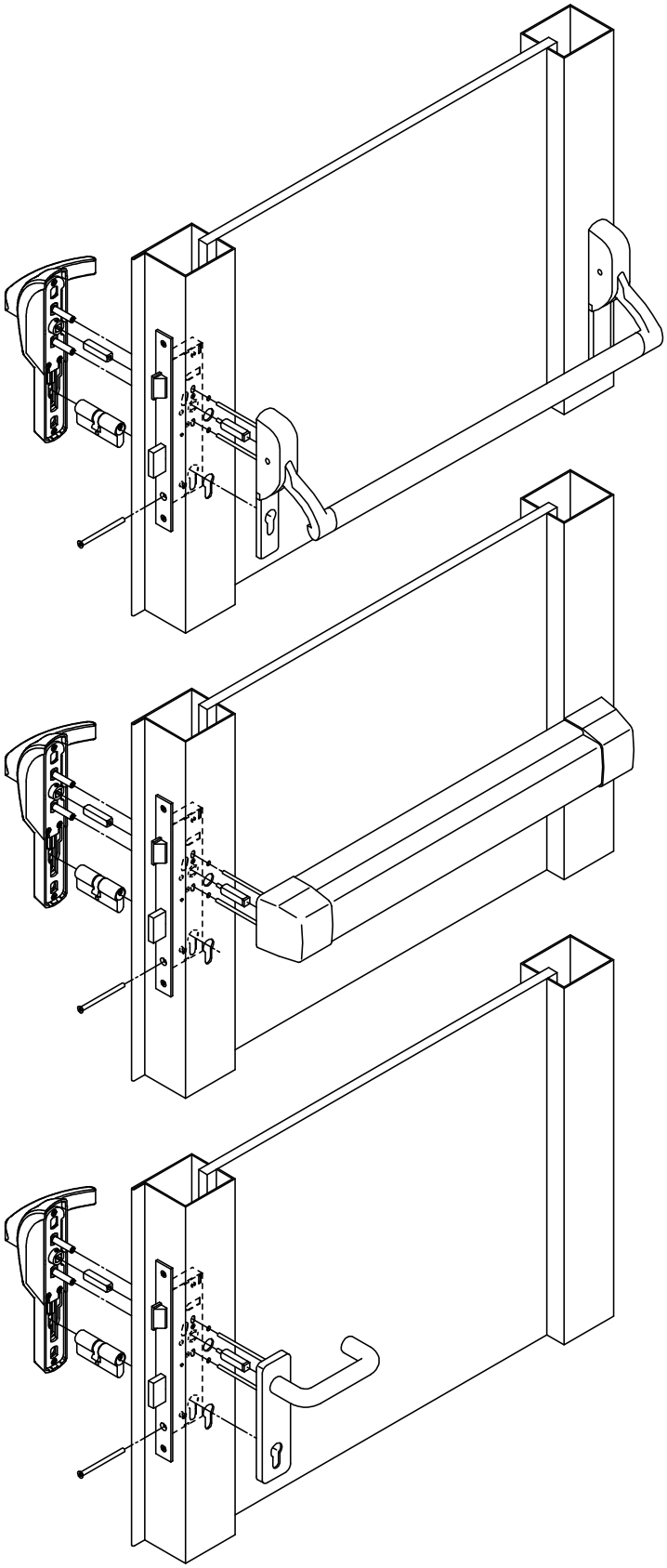

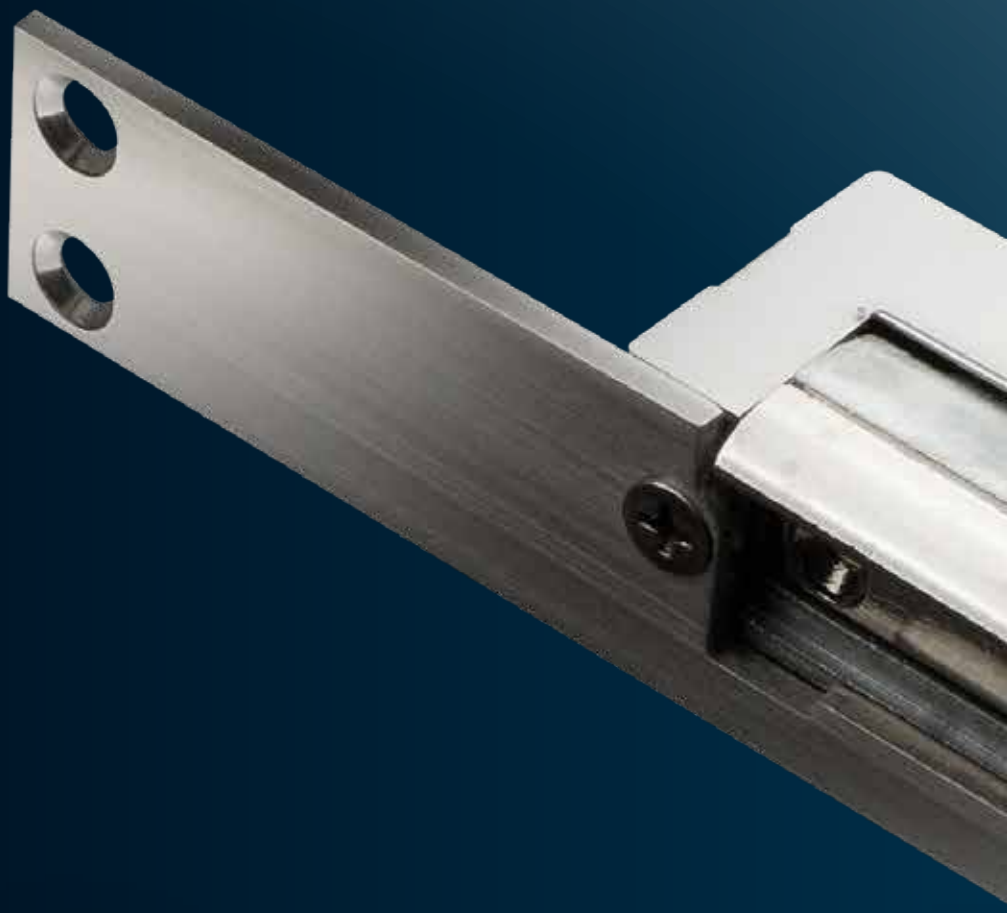

OMNIA

- SECURITY ELECTRIC STRIKES FOR WOODEN OR METAL DOORS
- RADIAL AND OMNIA 16 SERIES WITH 16 MM REDUCED GAUGE
- EXIT SERIE FOR PANIC BARS
- BLINDO SERIE FOR INTERLOCKED AND REINFORCED DOORS
- GLASS SERIE FOR CRYSTAL DOORS

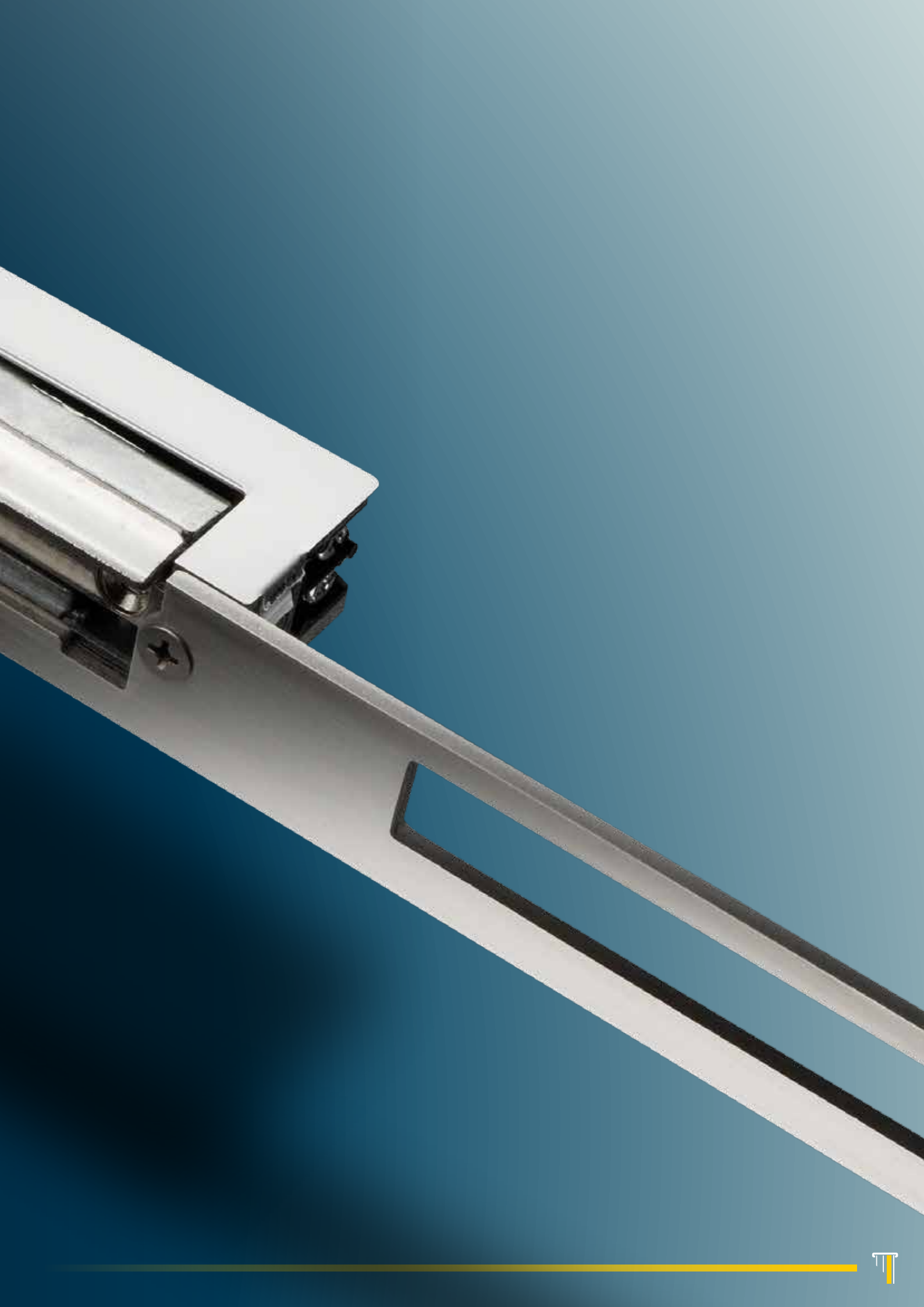

OMNIA

www.opera-italy.com

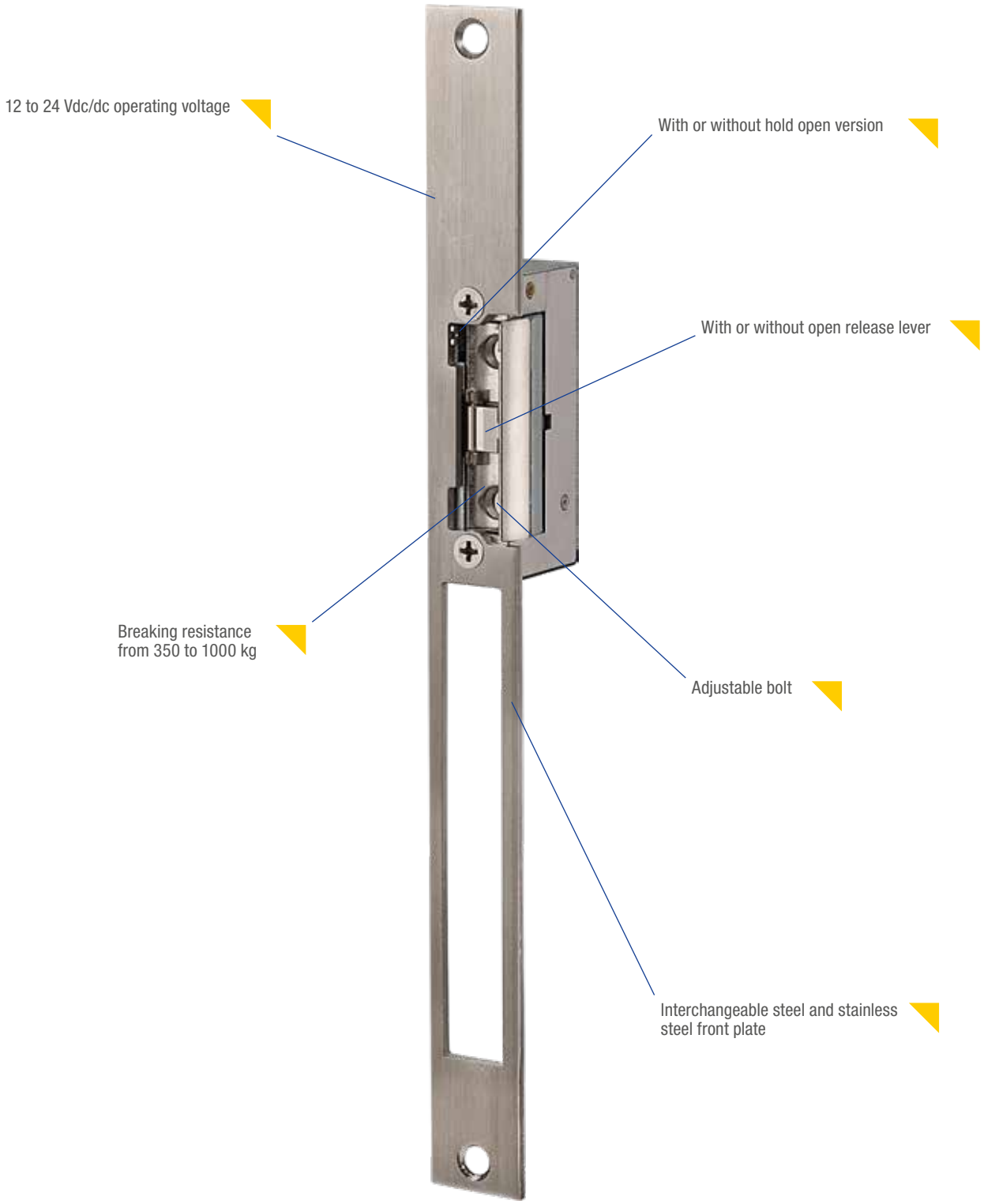

PLUS

- Ideal to electrify door openings with mechanical locks
- Breaking resistance from 350 to 1000 kg
- Fail safe or fail secure versions
- Low consumption versions to be matched with access control systems
- Versions with door status micro switch
- Wide range of front plates and finishes

OPENING SYSTEM

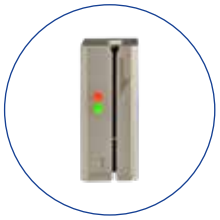

CLOSED

OPEN

CRYSTAL DOOR EXAMPLE

- Glass electric strike for crystal doors
- Door block without lock
- Fail safe or fail secure versions
- For crystal thickness up to 12 mm
- Stainless steel front plate
- To be matched with access control systems

Common mechanical characteristics: Body and latch block in anti-corrosive metal, symmetrical - reversible. Destruction resisting power: 350 Kg. Horizontally adjustable latch block. **Provided without striking plate (to be ordered– see pages 104, 105 and 108). Use:** electric strike for aluminium or wood doors with latch or deadbolt locks.

Art.	Description	€
	ELECTRIC STRIKE Fail locked Without hold open function (opening limited to electrical impulse duration)	
31012	Operating voltage: 8 -12 Vac - 1.000 mA - without open release lever	**36,20**
31012UNI	Operating voltage: 12 Vdc - 300 mA - without open release lever	**43,60**
31024DC	Operating voltage: 24 Vdc - 170 Ma - without open release lever	**42,30**
31112	Operating voltage: 8 -12 Vac - 1.000 mA - with open release lever	**39,80**
31112UNI	Operating voltage: 12 Vdc - 300 mA - with open release lever	**46,10**
31124DC	Operating voltage: 24 Vdc - 170 Ma - with open release lever	**46,20**

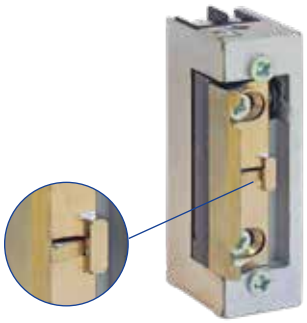

Hold open function lever

	ELECTRIC STRIKE Fail locked With hold open function (opening with electrical impulse) Relocking after door opening	
31212L	Operating voltage: 8 -12 Vac – 1.000 mA - without open release lever	**41,10**
31212L UNI	Operating voltage: 12 Vdc – 300 mA - without open release lever	**47,30**
31224LDC	Operating voltage: 24 Vdc – 170 mA - without open release lever	**47,40**
31312L	Operating voltage: 8 -12 Vac – 1.000 mA - with open release lever	**43,60**
31312L UNI	Operating voltage: 12 Vdc – 300 mA - with open release lever	**49,80**
31324LDC	Operating voltage: 24 Vdc – 170 mA - with open release lever	**49,80**

	AUTOMATIC ELECTRIC STRIKE **WITH HOLD OPEN FUNCTION BUILT IN** Fail locked. Operating voltage: 8 -12 Vac - Current: 1,000 mA With built in hold open function without reload piston (opening with electrical impulse) Relocking after door opening	
31412A	Without open release lever	**46,10**
31512A	With open release lever	**54,30**

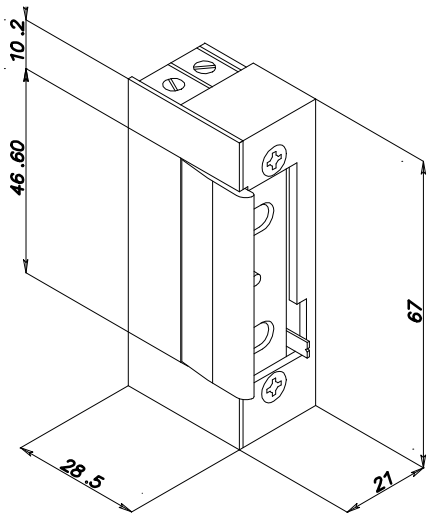

Common mechanical characteristics: Body and latch block in anti-corrosive metal, symmetrical – reversible. Destruction resisting power: 350 Kg. **Horizontally adjustable latch block. Without striking plate (to be ordered separately – see pages 104, 105 and 108).**
Use: electric strike for aluminium or wood doors with latch or deadbolt locks

	Art.	Description	€
	31012DCPN	**LOW CONSUMPTION ELECTRIC STRIKE FOR ACCESS CONTROL SYSTEMS** **Fail locked** Operating voltage: 12 Vac/dc - Current absorption: 250 mA Internal anti-disturb varistor Without hold open function (opening limited to electrical impulse duration) **Use:** electric strike for aluminium or wood doors with latch or deadbolt locks Special low current absorption with anti-disturb varistor. Ideal for use with access control systems (i.e. : hotel badge readers)	89,60
	31012DCF	**ELECTRIC STRIKE WITH UP-LIFTED LATCH FOR ACCESS CONTROL SYSTEMS** **Fail locked** Operating voltage: 12Vac/dc - 250mA - without hold open function - opening limited to electrical impulse duration - Internal anti-disturb varistor	96,00
	31412FTA	Operating voltage: 12Vac - 1000 mA - with internal hold open function - opening with electrical impulse - Relocking after door opening **Use:** electric strike for wood doors with deadlocked latch. It allows the complete action of the lock latch in order to activate the deadlocking. Special low current absorption with anti-disturb varistor. Ideal for use with access control systems (i.e.: hotel badge readers)	52,20
	31012TD	**TEMPORISED ELECTRIC STRIKE** **Fail locked** Operating voltage :12 Vac - Current : 650 mA Dimension 75x21x28 mm Without hold open function (opening with electrical impulse) Relocking after door opening Opening time from 5 to 10 secs After electrical impulse, door re-locks even if not moved, after few seconds. Without open release lever	93,70
	31112TD	With open release lever	97,20
	31812	**ELECTRIC STRIKE** **Fail unlocked** Horizontally adjustable latch block Opening limited to the duration of lack of power Operating voltage: 12 Vdc - Current: 350 mA	98,40
	31824	Operating voltage: 24 Vdc - Current: 120 mA **Note:** Not for thimber doors	98,40

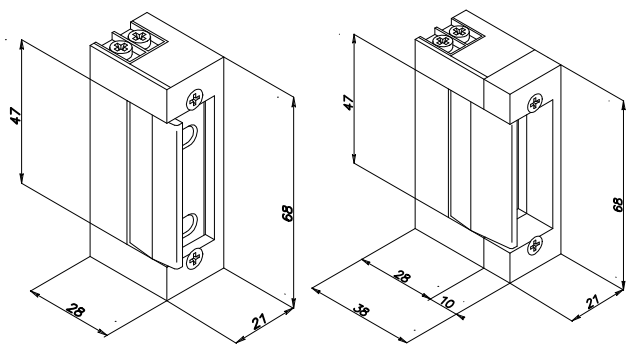

Common mechanical characteristics: Body and latch block in anti-corrosive metal, symmetrical – reversible.
Destruction resisting power: 500 Kg. Latch block horizontally adjustable. **Without striking plate (to be ordered separately – see page 106)**
Use: electric strike for aluminium or wood doors with latch or deadbolt locks.
Operation: in this radial electric strike the door latch bolt does not pivot out during opening but rather moves into the electric strike housing. This means that no cut needs to be made in the door post for the movement of the latch bolt during opening.

Art.	Description	€
	ELECTRIC STRIKE Operating voltage: 8 -12 Vac - 1.000 mA Fail locked Without hold open function (opening limited to electrical impulse duration)	
32012	Without open release lever	**41,10**
32112	With open release lever	**43,60**

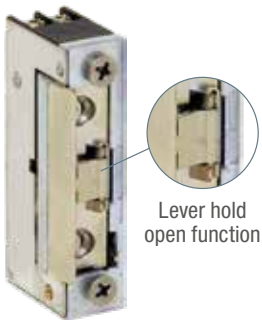

	ELECTRIC STRIKE Operating voltage: 8 -12 Vac - 1.000 mA Fail locked With hold open function (opening with electrical impulse) Relocking after door opening	
32212	Without open release lever	**43,60**
32312	With open release lever	**46,10**

	ELECTRIC STRIKE **Fail Safe - open with no power**	
32812	Operating voltage: 12Vdc - consumption 220 mA	**98,40**
32824	Operating voltage: 24Vdc - consumption 140 mA	**98,40**

	AUTOMATIC ELECTRIC STRIKE WITH HOUSED IN HOLD OPEN FUNCTION Operating voltage: 8 -12 Vac – 1.000 mA Fail locked With hold open function (opening with electrical impulse) Relocking after door opening	
35412	Without open release lever	**44,80**
35512	With open release lever	**47,30**

Opening encumbrance

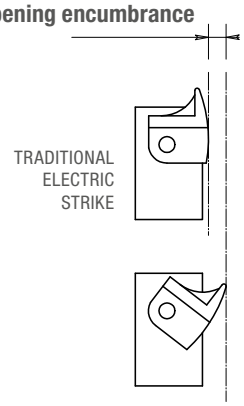

No opening encumbrance

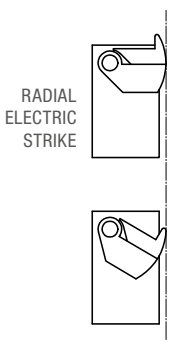

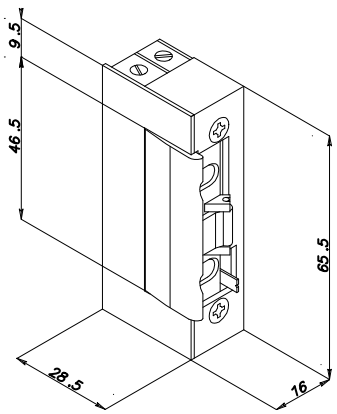

Common mechanical characteristics: Body and latch block in anti-corrosive metal, symmetrical – reversible. Destruction resisting power: 500 Kg. Latch block horizontally adjustable. **Without striking plate (to be ordered separately – see page 106)**
Use: electric strike for aluminium or wood doors with latch or deadbolt locks.
Operation: in this radial electric strike the door latch bolt does not pivot out during opening but rather moves into the electric strike housing. This means that no cut needs to be made in the door post for the movement of the latch bolt during opening.
NEW: guaranteed opening despite 40 Kg side pressure.

Art.	Description	€
	ELECTRIC STRIKE - PRELOAD Operating voltage: 6/28 Vac/dc Consumption: 12V / 390 mA peak / 210 mA holding 24V / 240 mA peak / 110 mA holding Fail locked Without hold open function (opening limited to electrical impulse duration)	
32012PLA	Without open release lever	**86,50**
32112PLA	With open release lever	**90,10**

	ELECTRIC STRIKE - PRELOAD Operating voltage: 6/28 Vac/dc Consumption: 12V / 390 mA peak / 210 mA holding 24V / 240 mA peak / 110 mA holding Fail locked With hold open function (relocking after door opening)	
32212PLA	Without open release lever	**93,70**
32312PLA	With open release lever	**97,20**

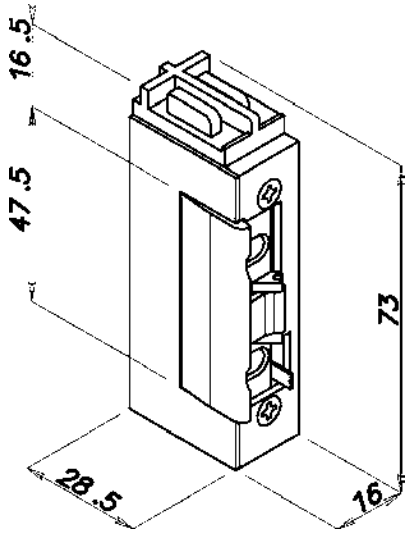

Common mechanical characteristics:
Body and latch block in anti-corrosive metal, **symmetrical** - reversible. Destruction resisting power: 1.000 Kg.
Without striking plate (to be ordered separately – see pages 104, 105 and 108)
Use: special electric strike for security doors for use with an access control system or interlocking doors

Art.	Description	€
	SECURITY ELECTRIC STRIKE Monitored latch position micro-switch C./N.O./N.C.	
	Fail locked Opening limited to electrical impulse duration	
34602A	Operating voltage : 12 Vdc - 230 mA	**168,40**
34604A	Operating voltage : 24Vdc - 170 mA	**168,40**
	Fail safe Opening limited to the duration of the lack of power	
34802A	Operating voltage : 12 Vdc - 300 mA	**199,20**
34804A	Operating voltage : 24Vdc - 140 mA	**199,20**

	SECURITY ELECTRIC STRIKE Monitored latch position micro-switch C./N.O./N.C.	
	Fail locked Opening limited to electrical impulse duration	
34622	Operating voltage : 12 Vdc - 260 mA	**168,40**
34624	Operating voltage : 24Vdc - 120 mA	**168,40**
	Fail safe Opening limited to the duration of the lack of power	
34822	Operating voltage : 12 Vdc - 200 mA	**199,20**
34824	Operating voltage : 24Vdc - 120 mA	**199,20**

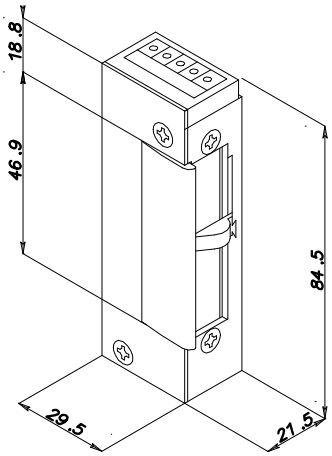

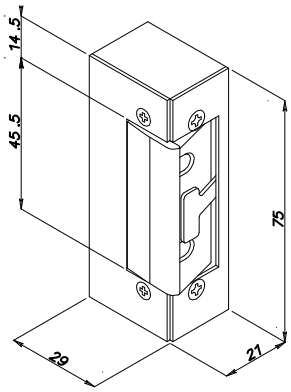

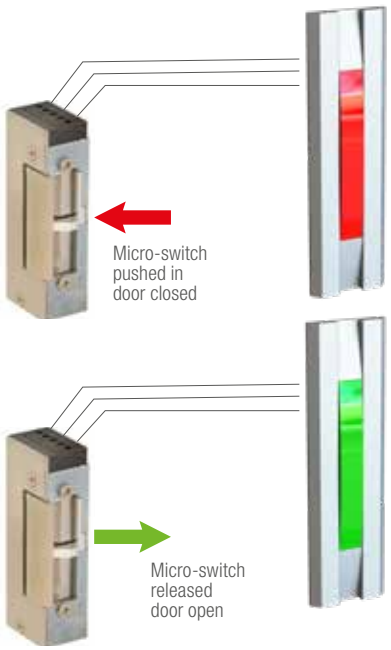

Common mechanical characteristics: Body in black painted metal. Latch block in metal, symmetrical - reversible. Destruction resisting power: 1,000 Kg. **Provided with n° 6 shims item 00360B**

Art.	Description	€
	SECURITY ELECTRIC STRIKE FOR PANIC BARS **Fail locked** Body in black painted metal, matt chrome on demand. Latch block in metal, symmetrical - reversible. Destruction resistance power: **1.000 Kg.**	
	Opening limited to electrical impulse duration:	
36012B	Operating voltage: 8/12 Vac/500 mA	**164,30**
36012BM	Operating voltage: 8/12 Vac/500 mA with microswitch C./ N.A./N.C.	**220,90**
36612B	Operating voltage: 12 Vdc/200 mA	**176,70**
36624B	Operating voltage: 24 Vdc/100 mA	**181,40**
36612BM	Operating voltage : 1 2 V dc /200 m A w ith m icroswitch C./N.O. /N.C.	**232,40**
36624BM	Operating voltage: 24 Vdc/100 mA with microswitch C./ N.A./N.C.	**237,10**
	Opening with electric pulse and relocking after door opening:	
36412B	Operating voltage: 8-12 Vac/500 mA with internal hold open function	**174,30**
	Fail unlocked - Fail safe	
36812B	Operating volta ge: 12 Vdc/2 00 mA	**212,20**
36824B	Operating volta ge: 24 Vdc/1 00 mA	**217,00**
36812BM	Operating voltage : 12 Vdc /200 mA with microswitch C./N. O./N.C.	**267,90**
36824BM	Operating volta ge: 24 Vdc/1 00 mA with microswitch C./N.O./N.C.	**273,90**
ART. + CR	Matt chrome finish	**+ 14,80**

	SHIMS FOR ELECTRIC STRIKE FOR SURFACE FIXING 2 mm. shims, to compensate for height of the electric strike with the panic bar latch	
00360B	In Black ABS	**2,00**
00360BG	In Grey ABS (for version CR)	**2,00**

	ELECTRIC STRIKE FOR PANIC BARS **Fail locked** Body in black painted metal, matt chrome on demand. Latch block in metal, symmetrical - reversible. Power supply: 8/12 Vac/1000 mA Destruction resistance power: **350 Kg**.	
36012C	Opening limited to electrical impulse duration	**106,70**
36412C	Opening with electric pulse and relocking after door opening	**118,60**
ART. +CR	Matt chrome finish	**+ 14,80**
	Provided with n° 7 shims item 00360C	
00360C	1mm shim	**2,00**

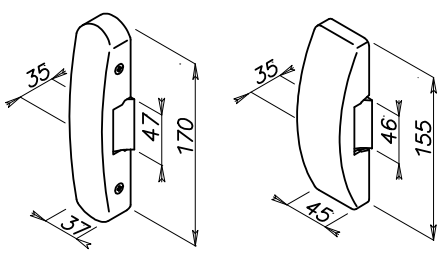

Common mechanical characteristics: Body and latch block in metal, asymmetrical (determine hand). Destruction resisting power: 700 Kg.
Without striking plate (to be ordered separately - See page 107)
Use: electric strikes for armoured doors
See page 91 to set hand of the product

Picture right hand

Art.	Description	€
	SECURITY ELECTRIC STRIKE **Fail locked** Opening with electrical impulse	
37012.1A	Power supply: 12 Vac - 1,000 mA - Right hand	**82,20**
37012.2A	Power supply: 12 Vac - 1,000 mA - Left hand	**82,20**
37612.1A	Power supply: 12 Vac - 200 mA - Right hand	**122,10**
37612.2A	Power supply: 12 Vdc - 200 mA - Left hand	**122,10**
37624.1A	Power supply: 24 Vdc - 150 mA - Right hand	**122,10**
37624.2A	Power supply: 24 Vdc - 150 mA - Left hand	**122,10**
	Locked with power - Fail safe Opening limited to the duration of the power failure	
37812.1A	Power supply: 12 Vdc - 200 mA - Right hand	**122,10**
37812.2A	Power supply: 12 Vac - 200 mA - Left hand	**122,10**
37824.1A	Power supply: 24 Vdc - 150 mA - Right hand	**122,10**
37824.2A	Power supply: 24 Vac - 150 mA - Left hand	**122,10**

Picture right hand

	AUTOMATIC SECURITY ELECTRIC STRIKE **Fail locked** Opening with electrical impulse. Relocking after door opening Operating voltage: 12 Vac - 1000 mA	
37212.1A	Right hand - with lever for hold open function	**64,70**
37212.2A	Left hand - with lever for hold open function	**64,70**
37312.1A	Right hand - lever hold open function and mechanical unlocking	**68,50**
37312.2A	Left hand - lever hold open function and mechanical unlocking	**68,50**
37412.1A	Right hand - with internal hold open function	**64,70**
37412.2A	Left hand - with internal hold open function	**64,70**
37512.1A	Right hand - internal hold open function, mechanical unlocking	**68,50**
37512.2A	Left hand - internal hold open function, mechanical unlocking	**68,50**

Picture right hand

	SECURITY ELECTRIC STRIKE PRELOAD **Fail locked** Fail secure Electric strike with internal electronic circuit for armored doors unlockable with a side load on the latch up to 40 Kg. Power supply: 6 - 28 Vac/dc Absorbed current: 12V / 390 mA at activation, 210 mA in standby. Absorbed current: 24V / 240 mA at activation, 110 mA in standby	
	Operating voltage 12 Vdc - 200 mA power	
37012.1PLA	Right hand - without hold open function	**135,00**
37012.2PLA	Left hand - without hold open function	**135,00**
	With sliding hold open function	
37312.1PLA	Right hand - with hold open function	**125,00**
37312.2PLA	Left hand - with hold open function	**125,00**

Common mechanical characteristics: Body and latch block in metal, asymmetrical (determine hand).
Destruction resisting power: 1,000 Kg. **Without striking plate (to be ordered separately – See page 104, 105 and 108)**
Use: electric strike for latch and deadbolt locks applied on gates exposed to precipitation

Art.	Description	€
	SECURITY ELECTRIC STRIKE **Fail locked** IP rating: IP56 (can operate outside)	
	Without hold open function. Opening limited to electrical impulse duration	
38012.1A	Right hand - 12 Vac - 500 mA Power	**102,00**
38012.2A	Left hand - 12 Vac - 500 mA Power	**102,00**
	Automatic with internal hold open function. Opening with electrical impulse. Relocking after door opening.	
38412.1A	Right hand - 12 Vac - 500 mA Power	**109,50**
38412.2A	Left hand - 12 Vac - 500 mA Power	**109,50**
	On request:	
38612.1/.2A	Security - 12 Vdc - 200 mA power:	**144,60**
38624.1/.2A	Security - 24 Vdc - 150 mA power:	**144,60**
38812.1/.2A	Anti-panic - 12 Vdc - 200 mA power:	**173,10**
38824.1/.2A	Anti-panic - 24 Vdc - 150 mA power	**173,10**

Right hand

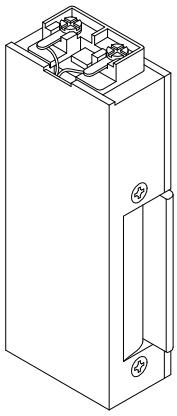

Right hand

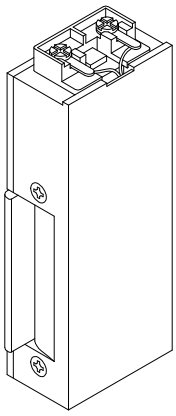

Omnia Blindo 700

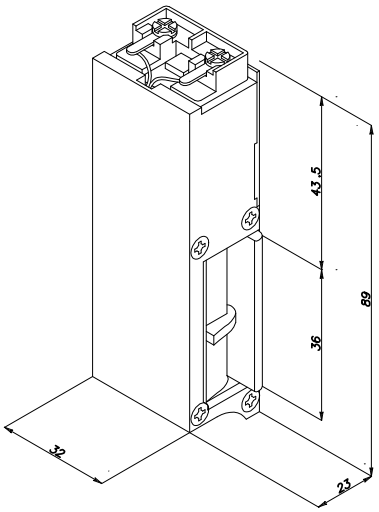

Omnia Blindo 700 Preload

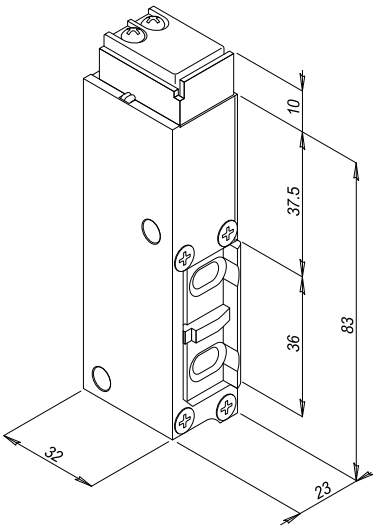

Omnia Blindo 1000

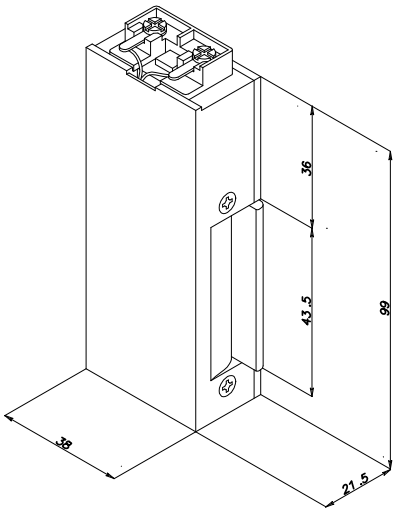

Common mechanical characteristics: Body and latch block in metal, asymmetrical. Supplied with striking plate in stainless steel
Use: electric strikes for glazed doors

Art.	Description	€
39012A	**SECURITY ELECTRIC STRIKE FOR GLASS DOORS** **Fail locked** Mortice electric strike for glazed doors – from 10 to 12 mm thick doors Opening limited to electrical impulse duration Operating voltage :12 Vdc Current absorption: 280 mA	228,80

Art.	Description	€
39812A	**SECURITY ELECTRIC STRIKE FOR GLASS DOORS** **Fail unlocked - Fail safe** Mortice electric strike for glazed doors – from 10 to 12 mm thick doors Operating voltage: 12 Vdc Current absorption: 280 mA	256,10

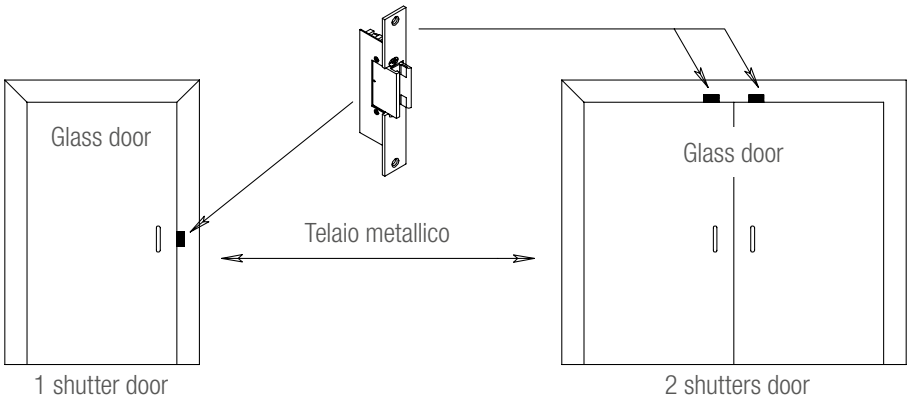

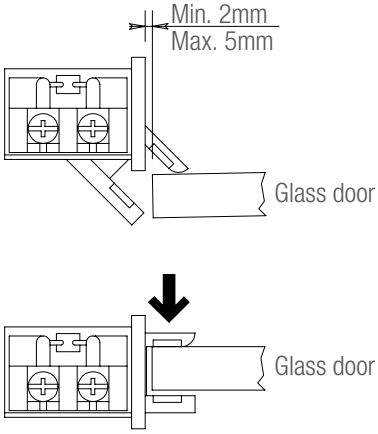

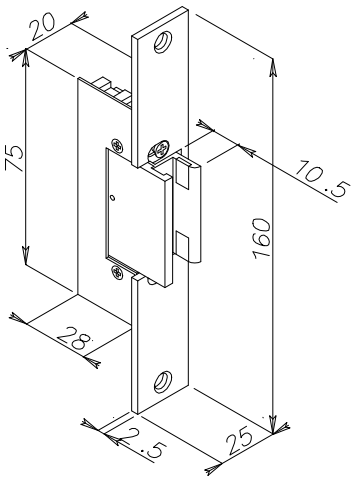

TABLE TO IDENTIFY THE HAND OF THE ELECTRIC STRIKE

Serie OMNIA con frontali angolari

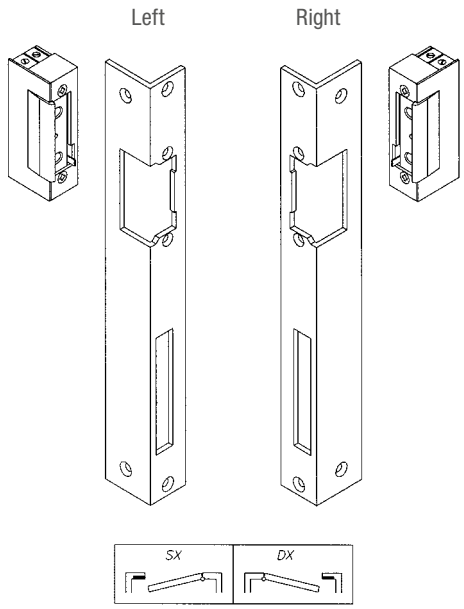

Serie OMNIA RADIAL

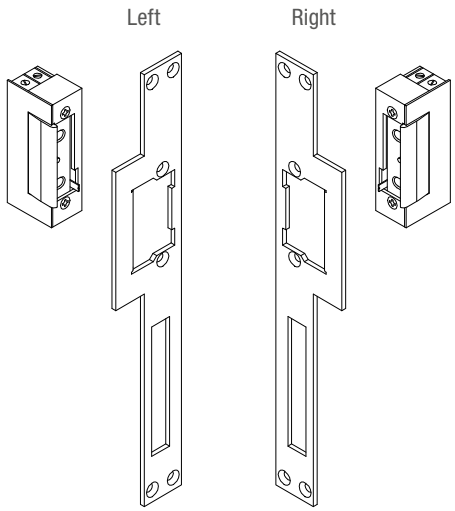

Serie OMNIA BLINDO 700

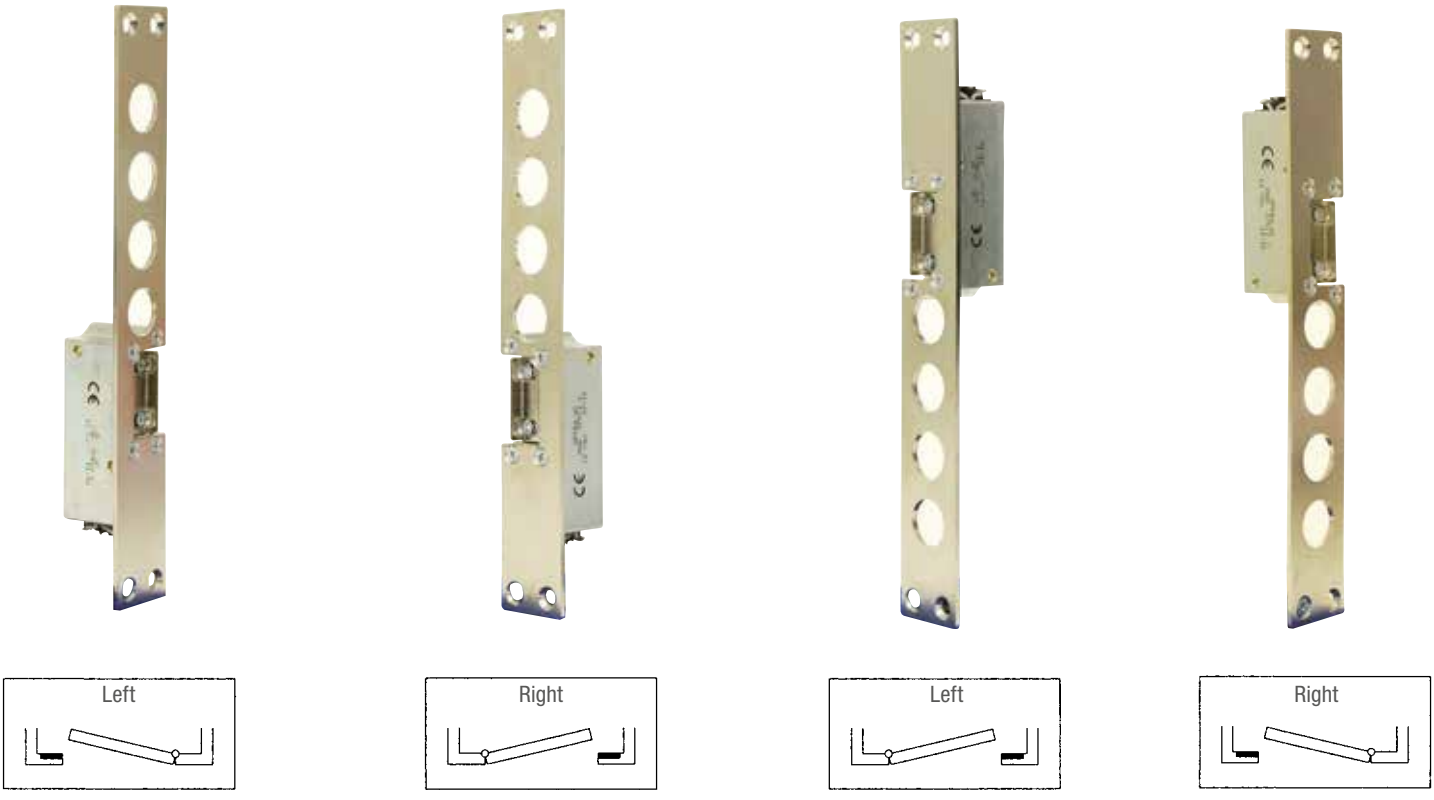

Art.	Description	€
03010	**SHORT STRIKING PLATE** Asymmetrical for latch locks only In grey painted steel Dimensions (mm): 160 x 25 x 3 – see drawing at page 110 Reversible hand **Use:** for all electric strikes Omnia Micro series, Omnia 1.000 series	4,40

03010S	**SHORT STRIKING PLATE** Symmetrical for latch locks only In grey painted steel Dimensions (mm): 110 x 25 x 3 - see drawing at page 110 Reversible hand **Use:** pfor all electric strikes Omnia Micro series, Omnia 1,000 series 3,50 03030 03030GD	4,40

LONG STRIKING PLATE
For latch and deadbolt security locks.
In grey painted steel
Dimensions (mm): 250 x 25 x 3 - see drawing at page 110
Reversible hand

03030	In grey painted steel	6,90
03030GD	In gold painted steel	6,90
03030CRO	In glazed chromium plated steel	9,70

Use: for all electric strikes Omnia Micro series, Omnia 1.000 series

LONG STRIKING PLATE
For latch and deadbolt security locks.
In gold painted steel
Dimensions (mm): 250 x 25 x 2,5 - see drawing at page 110
Right or left hand

03030.1GDR	Right hand	17,40
03030.2GDR	Left hand	17,40

Use: for all electric strikes Omnia Radial

Art.	Description	€
03031	**LONG STRIKING PLATE** For latch and deadbolt security locks. In stainless steel Dimensions (mm): 250 x 25 x 3 - see drawing at page 110 Reversible hand **Use:** for all electric strikes Omnia Micro series, Omnia 1.000 series	18,70
03130	**LONG STRIKING PLATE** For latch and deadbolt security locks, hole (mm) 102 x 12 for insertion in the swinging deadbolt. In grey painted steel Dimensions (mm): 250 x 25 x 3 - see drawing at page 110 Reversible hand **Use:** only for Omnia Micro series strikes	7,80
03131	**LONG STRIKING PLATE** For latch and deadbolt security locks, hole (mm) 102 x 12 for insertion in the swinging deadbolt. In stainless steel Dimensions (mm): 250 x 25 x 3 - see drawing at page 110 Reversible hand **Use:** only for Omnia Micro series strikes	18,70
03132	**LONG STRIKING PLATE** For latch and deadbolt security locks, tapered hole (mm) 102 x 12 for insertion in the swinging deadbolt. In stainless steel Dimensions (mm): 250 x 25 x 3 - see drawing at page 110 Reversible hand **Use:** only for Omnia Micro series strikes	19,40
	SHORT ANGULAR STRIKING PLA Only for latch locks - Squared edges In gold painted steel Dimensions (mm): 172 x 32 x 25 - see drawing at page 110 Reversible hand	
03162	Squared edges	13,50
03162BA	Rounds edges	13,50
	Use: for all electric strikes Omnia Micro series, Omnia 1.000 series	

Art.	Description	€
03310	**SHORT STRIKING PLATE FOR OMNIA 16 - RADIAL** Only for latch locks In grey painted steel Dimensions (mm): 130 x 22 x 3 - see drawing at page 110 Reversible hand **Use:** for all electric strikes Omnia 16 - Radial series for mortice fixing, mounted on wooden or PVC door profiles	5,80
03310R	**SHORT STRIKING PLATE FOR OMNIA RADIAL** Only for latch locks In nickel plated steel Dimensions (mm): 130 x 22 x 3 - see drawing at page 110 Reversible hand **Use:** or all electric strikes Omnia Radial series for mortice fixing, mounted on wooden or PVC door profiles	6,30
03330	**LONG STRIKING PLATE FOR OMNIA 16 - RADIAL** For latch and deadbolt security locks In grey painted steel Dimensions (mm): 250 x 22 x 3 - see drawing at page 110 Reversible hand **Use:** for all electric strikes Omnia 16 - Radial series for mortice fixing, mounted on wooden or PVC door profiles	9,10
03331	**LONG STRIKING PLATE FOR OMNIA 16 - RADIAL** For latch and deadbolt security locks In stainless steel Dimensions (mm): 250 x 22 x 3 - see drawing at page 110 Reversible hand **Use:** for all electric strikes Omnia 16 - Radial series for mortice fixing, mounted on wooden door/window profiles	19,40
	LONG ANGULAR STRIKING PLATE FOR OMNIA 16 - RADIAL For latch and deadbolt security locks In zinc plated steel with short side flank Dimensions (mm): 208 x 36 x 18 - see drawing at page 111 Not reversible – Specify hand	19,40
03342.1	Right hand	19,40
03342.2	Left hand	
	Use: for all electric strikes Omnia 16 – Radial series for mortice fixing, mounted on wooden door profiles	

Art.	Description	€
	LONG STRIKING PLATE FOR OMNIA BLINDO 700 For security locks for armoured doors latch and 4 deadbolts backset (mm) 28 In polished nickel plated steel Dimensions (mm): 248 x 35 x 2.5 - see drawing at page 111 Not reversible – Specify hand - see page 93	
03370.1	Right hand	**18,70**
03370.2	Left hand	**18,70**
03370R	Reversible	**21,30**
	Use: or all electric strikes Omnia Blindo 700 series	

	LONG STRIKING PLATE FOR OMNIA BLINDO 700 For security locks for armoured doors latch and 4 deadbolts backset (mm) 28 (41.6 mm between latch and deadbolt) In polished nickel plated steel Dimensions (mm): 322 x 35 x 2,5 - see drawing at page 111 Not reversible – Specify hand - see page 93	
03371.1	Right hand	**18,70**
03371.2	Left hand	**18,70**
	Use: for all electric strikes Omnia Blindo 700 series	

03372	**LONG STRIKING PLATE FOR OMNIA MICRO** For security locks for armoured doors latch and 2 deadbolts backset (mm) 55.6 In polished nickel plated steel Dimensions (mm): 293 x 32 x 2,5 - see drawing at page 111 Reversible hand	**18,70**
	Use: for all electric strikes Omnia Micro series	

	LONG STRIKING PLATE FOR OMNIA BLINDO 700 For security locks and 3 deadbolts backset (mm) 37 In polished nickel plated steel Dimensions (mm): 248 x 35 x 2.5 - see drawing at page 111 Not reversible – Specify hand - see page 93	
03374.1	Right hand	**18,70**
03374.2	Left hand	**18,70**
03374R	Reversible	**21,30**
	Use: for all electric strikes Omnia Blindo 700 series	

	LONG STRIKING PLATE FOR OMNIA BLINDO 700 For security locks and 4 deadbolts backsets (mm) 28 (33.5 mm between latch and deadbolt) In polished nickel plated steel Dimensions (mm): 322 x 35 x 2,5 - see drawing at page 111 Not reversible – Specify hand - see page 93	
03375.1	Right hand	**18,70**
03375.2	Left hand	**18,70**
	Use: for all electric strikes Omnia Blindo 700 series	

Art.	Description	€
03410	**SHORT STRIKING PLATE** Only for latch locks In hardened anodized aluminium. Dimensions (mm): 160 x 25 x 3 - see drawing at page 110 Reversible hand **Use:** for all electric strikes Omnia Micro and Omnia 1.000 series for mortice fixing	10,30
03411	**SHORT STRIKING PLATE** Only for latch locks In stainless steel Dimensions (mm): 160 x 25 x 3 - see drawing at page 110 Reversible hand **Use:** for all electric strikes Omnia Micro series, Omnia 1.000	11,70
03431	**LONG STRIKING PLATE** For latch and deadbolt locks In stainless steel Dimensions (mm): 280 x 25.5 x 3 - see drawing at page 110 Reversible hand **Use:** for replacement of security type electric strikes eff-eff series 141, 331 and 341 with Omnia 1,000 series for mortice fixing	62,80
	LONG ANGULAR STRIKING PLATE For latch and deadbolt security locks In gold painted steel Dimensions (mm): 250 x 32 x 25 - see drawing at page 111 Not reversible – Specify hand	
03442.1	Right hand - square edges	19,90
03442.2	Left hand - square edges	19,90
03442.1BA	Right hand - round edges	19,90
03442.2BA	Left hand - round edges	19,90
	Use: for all electric strikes Omnia Micro series, Omnia 1.000	
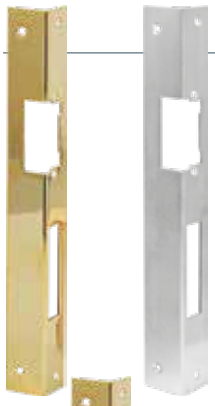		
	LONG ANGULAR STRIKING PLATE For latch and deadbolt security locks Dimensions (mm): 265 x 30 x 26 - see drawing at page 111 Not reversible – Specify hand	
03445.1	Right hand - in satin nickel plated steel	22,40
03445.2	Left hand - in satin nickel plated steel	22,40
03445.1GD	Right hand - in satin brass steel	26,10
03445.2GD	Left hand - in satin brass steel	26,10
	Use: for all electric strikes Omnia Micro series, Omnia 1.000	
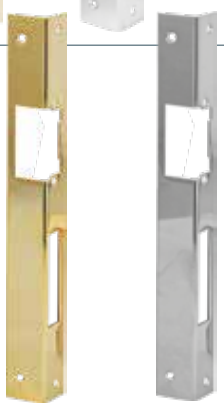		
	LONG ANGULAR STRIKING PLATE For latch and deadbolt security locks Dimensions (mm): 265 x 30 x 26 - see drawing at page 111 Not reversible – Specify hand	
03446.1	Right hand - in satin nickel plated steel	22,40
03446.2	Left hand - in satin nickel plated steel	22,40
03446.1GD	Right hand - in gold plated steel	26,10
03446.2GD	Left hand - in gold plated steel	26,10
	Use: for electric strike 31012DCF and 31412F	

Art.	Description	€
08710	**LATCH LOCK** Body in grey painted steel Dimensions (mm): 30 x 15 x 15 Striking plate in grey painted steel Dimensions (mm): 55 x 20 x 3 Latch in nickel plated steel (mm) 12 x 10 mm extension Reversible hand **Use:** for all electric strikes Omnia series for mortice fixing	23,70

Art.	Description	€
08711A	**LATCH LOCK** Body in aluminium Dimensions (mm): 110 x 24 x 3 Front plate in stainless steel - Latch in nickel plated steel height (mm) 22 Reversible hand **Use:** for all electric strikes Omnia series for mortice fixing	39,10

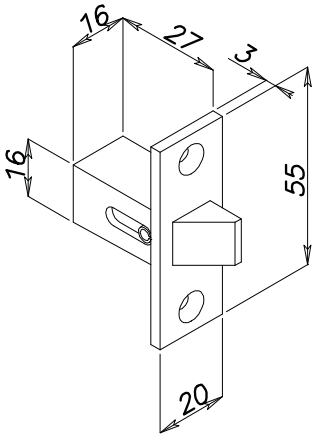

Art. 08710

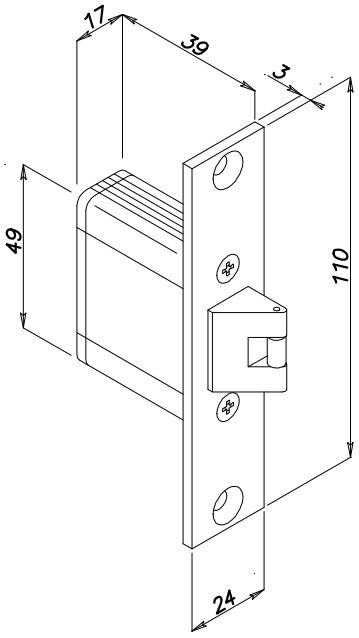

Art. 08711A

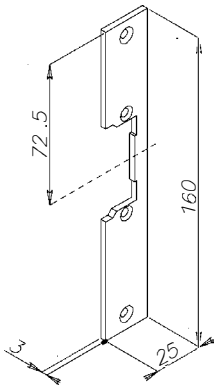

Art. 03010
Art. 03410
Art. 03411

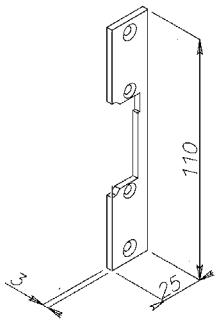

Art. 03010S

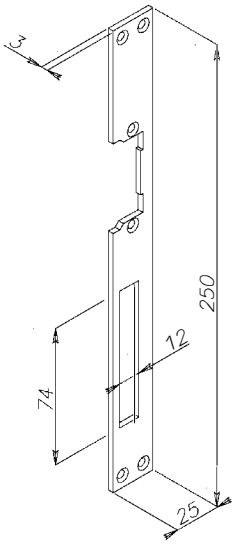

Art. 03030
Art. 03030 GD
Art. 03031

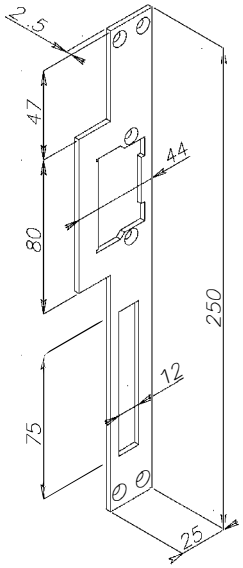

Art. 03030GDR

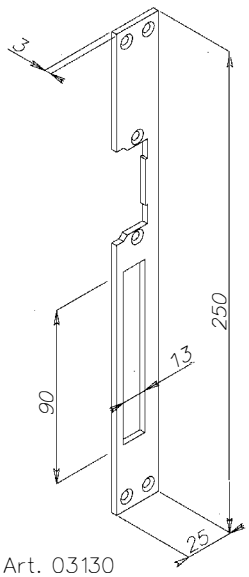

Art. 03130
Art. 03131

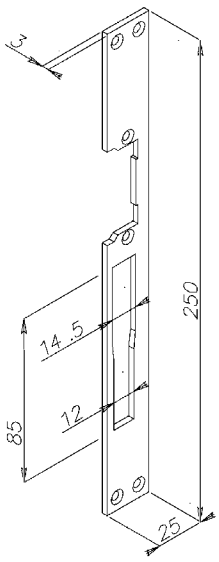

Art. 03132

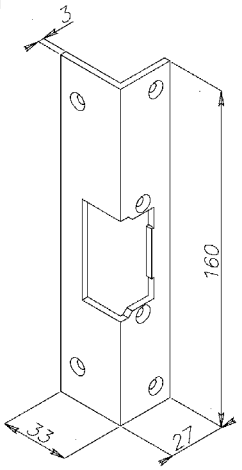

Art. 03162

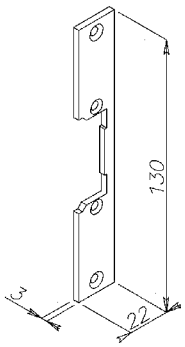

Art. 03310

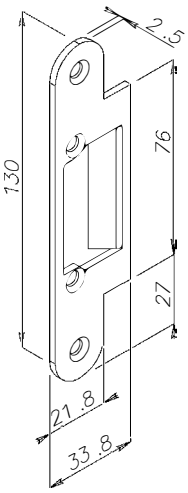

Art. 03310R

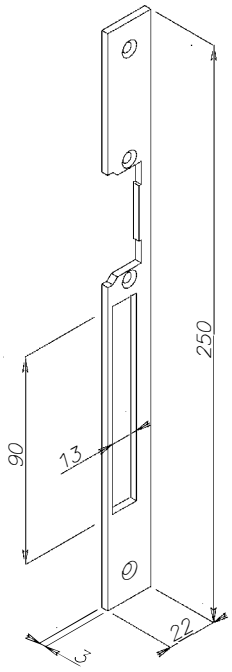

Art. 03330 - 03331

DIMENSIONS OF STRIKING PLATES FOR ELECTRIC STRIKES

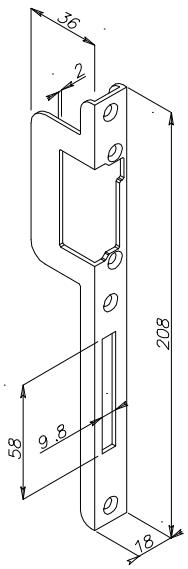

Art. 03342

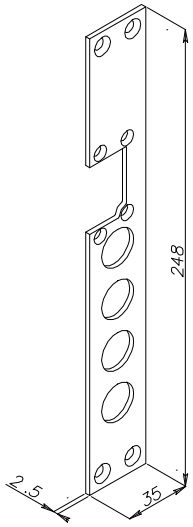

Art. 03370

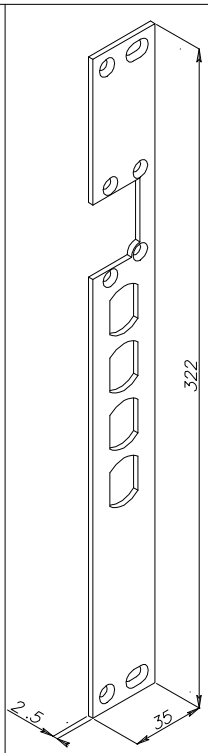

Art. 03371

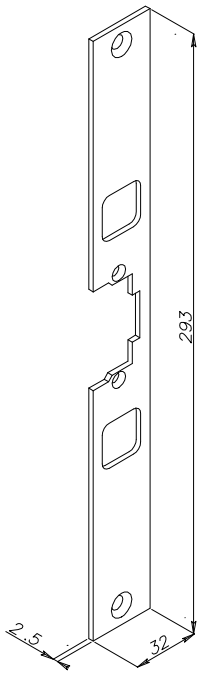

Art. 03372

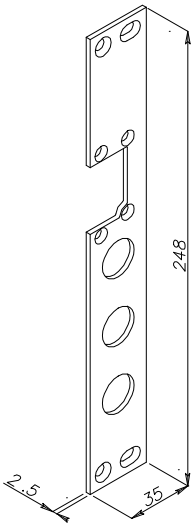

Art. 03374

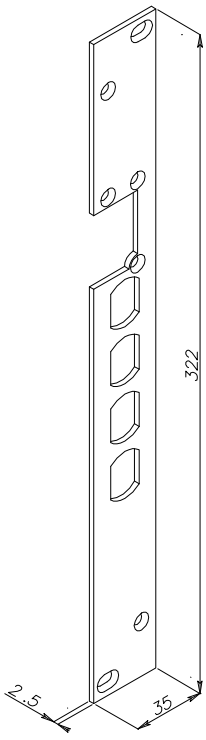

Art. 03375

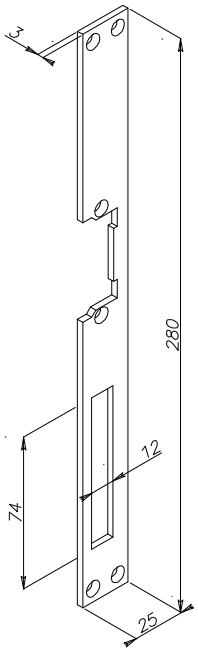

Art. 03431

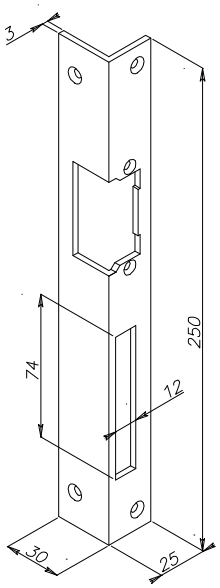

Art. 03442

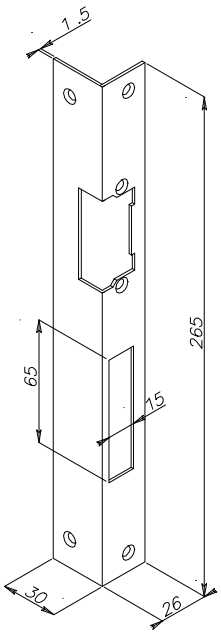

Art. 03445

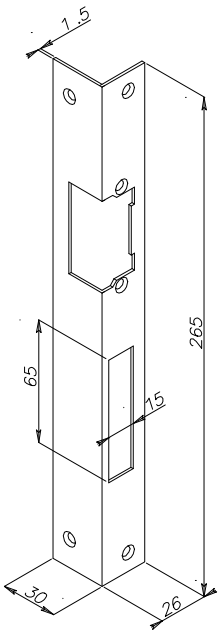

Art. 03446

OMNIA GEMINA

www.opera-italy.com

NEW

Art.	Description	€
23500	**ELECTRIC LOCK OMNIA GEMINA SERIES** Mechanical opening with European cylinder or handle. Front and strike plate in stainless steel. Bolt with mechanical lock in the closed position (excluding 20 mm backset version). Device on the front to lock the bolt in the closed position. Bolt dimensions: 30 mm x 2 mm x extension 14 mm. Power supply: 12 Vac. Current absorbed: 1,200 mA. Version: Fail secure (opening with power supply). Available backsets:mm 20 - 25 - 30 - 35 - 40 - 50 - 60 **Use:** Electric lock ideal for operation on hinged doors. The item consists of an electrical part to be fixed on the fixed frame of the door and a mechanical part to be installed on the door leaf. The door automatically closes when the door leaf is brought close, thanks to the pressure of the specific mechanical alignment device that manages the release of the latch. By providing the electrical impulse, the preload of the latch is released, allowing the unlocking of the latch during opening. The same opening can also be achieved mechanically using a key and handle.	270,40

BACKSET	Y
20	34
25	39
30	44
35	49
40	54
50	64
60	74

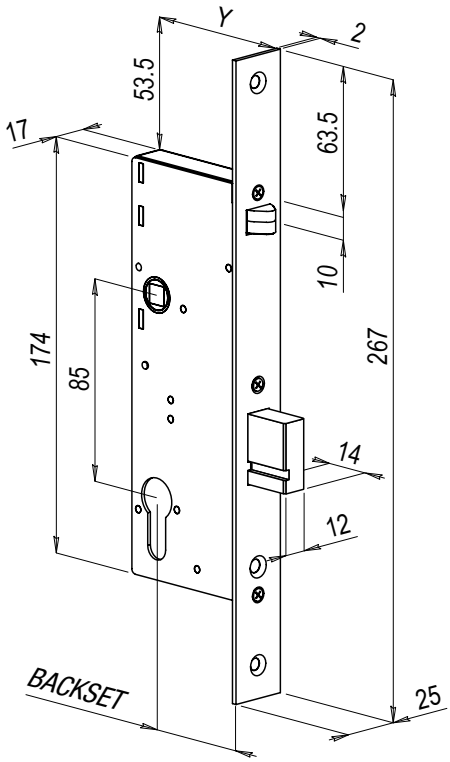

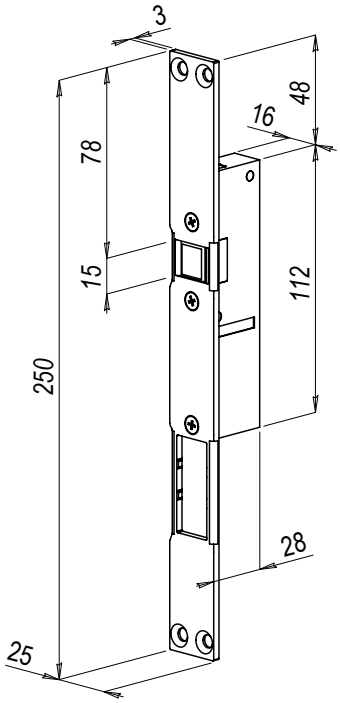

DOOR

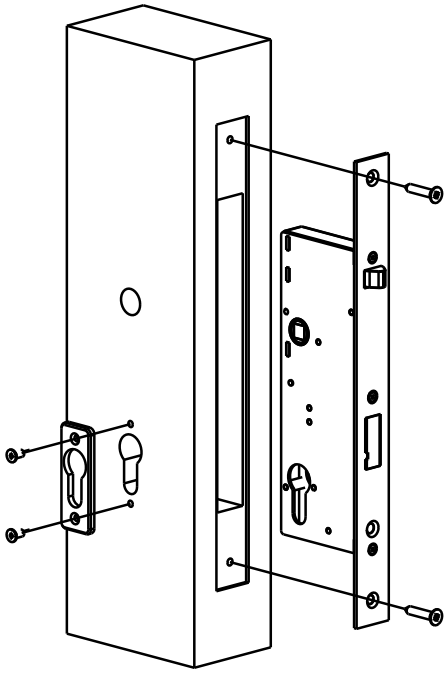

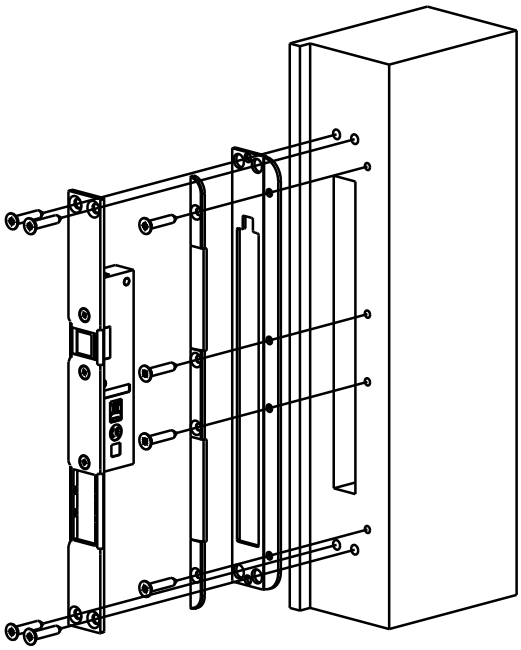

FRAME

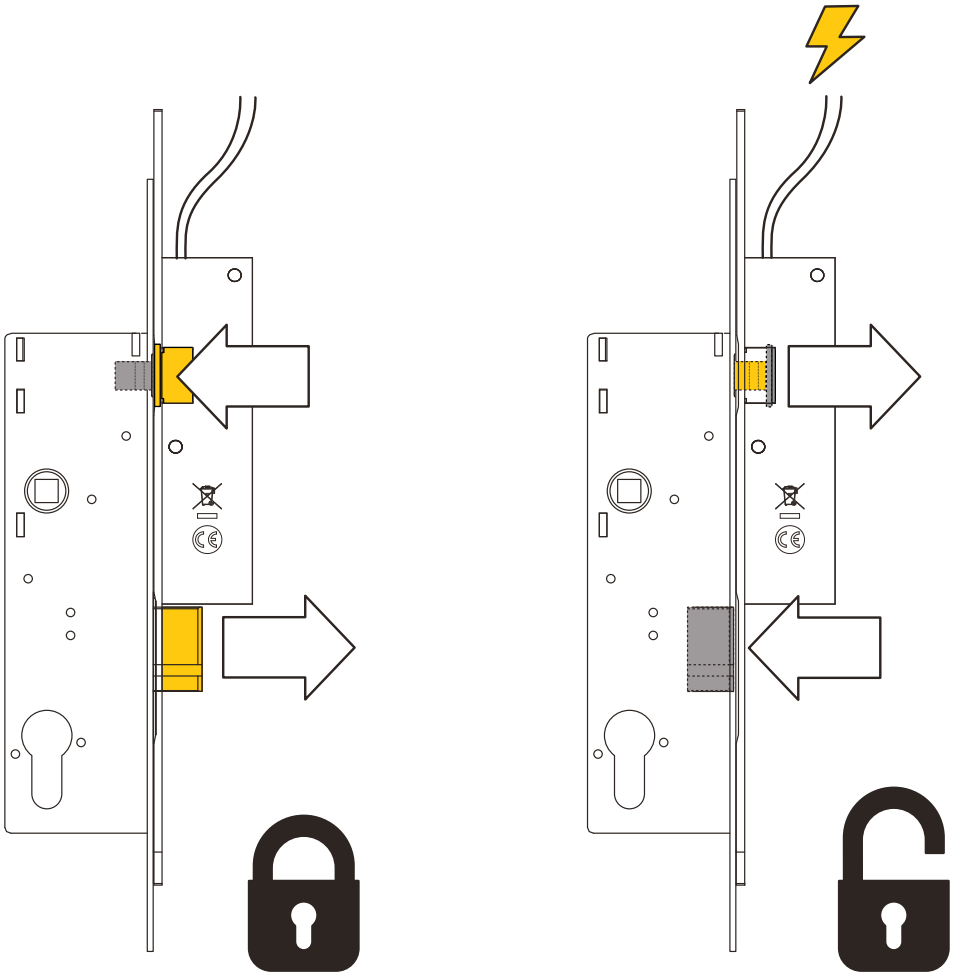

QUADRA

- HORIZONTAL SECURITY SOLENOID LOCKS
- APPLICATION ON DOORS AND ROLLING SHUTTERS
- MICRO VERSION FOR CABINETS AND WINDOWS APPLICATION
- MANUAL ACTIVATION WITH EUROPEAN CYLINDER
- EASY INSTALLATION

QUADRA

www.opera-italy.com

PLUS

- Reduced size Quadra Micro version for cabinets and doors closing
- Quadra version for doors and rolling shutters closing
- Easy operating system by direct current power supply
- Fail safe or fail secure versions
- Integrated electronics versions

DOOR WITH ELECTRONIC LOCK AND INTEGRATED ELECTRONICS

INTERNAL OPENING

EXTERNAL OPENING

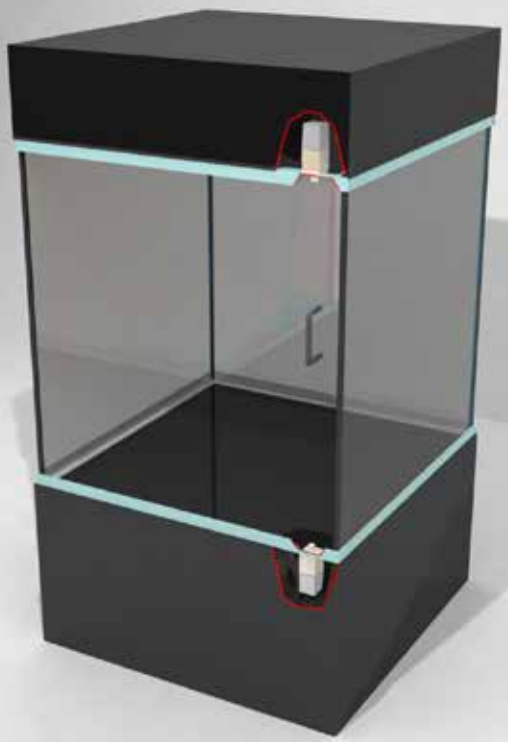

CONTROLLED OPENING

PLUS EXAMPLE

- Mortice closing system for metal or aluminium door frames
- Rim versions as supplementary closing system
- Ideal as closing system for cabinets managed by access control units
- To be matched to access control systems

Art.	Description	€

MICRO SOLENOID LOCK - FAIL SAFE

Open without power
Striking plate in stainless steel (mm) 80 x 25 x 3
Armature plate in stainless steel (mm) 80 x 25 x 3
with magnet adjustable in extension (only Art. 20610)
Deadbolt diameter (mm) 8, extension 8
Operating voltage: 12 Vdc/400mA or 24Vdc/200mA - ED 100%
Mode of operation: horizontal (vertical on request see page 129)
Deadbolt position micro-switch C./N.O./N.C

20610-12	12V - with N.O magnetic sensor*	**254,20**
20611-12	12V - without magnetic sensor	**234,80**
20610-24	24V - with N.O. magnetic sensor*	**254,20**
20611-24	24V - without magnetic sensor	**234,80**

* For connection to central control unit 54610A

20612

MICRO SOLENOID LOCK WITH INTERNAL ELECTRONIC

342,00

Fail safe
Front plate and striking plate in stainless steel mm 80 x 25 x 4
Striking plate with adjustable magnet for door status position
Bolt dimensions: diameter 8mm, extension 8
Operating voltage: 12Vdc - 400 mA peak, 270 mA for maintenance
24Vdc - 300 mA peak, 150 mA for maintenance
Internal microprocessor control electronic
Rapid plug-in connector
Bolt position free voltage contact C. / N.O. / N.C.

Push buttons for monitoring and adjustment of reclosing times from 0-5 sec. to approach of door and from 0-60 sec. if the door is not opened

Mode of operation: horizontal (vertical on request see page 129)

MICRO SOLENOID LOCK - FAIL SAFE

Open without power
Deadbolt diameter (mm) 8, extension 11 mm (8 mm. stroke)
Operating voltage: 12 Vdc/400mA or 24Vdc/200mA - ED 100%
Mode of operation: horizontal (vertical on request see page 129)
Deadbolt position micro-switch C./N.O./N.C

20613-12	12Vdc	**165,30**
20613-24	24Vdc	**165,30**

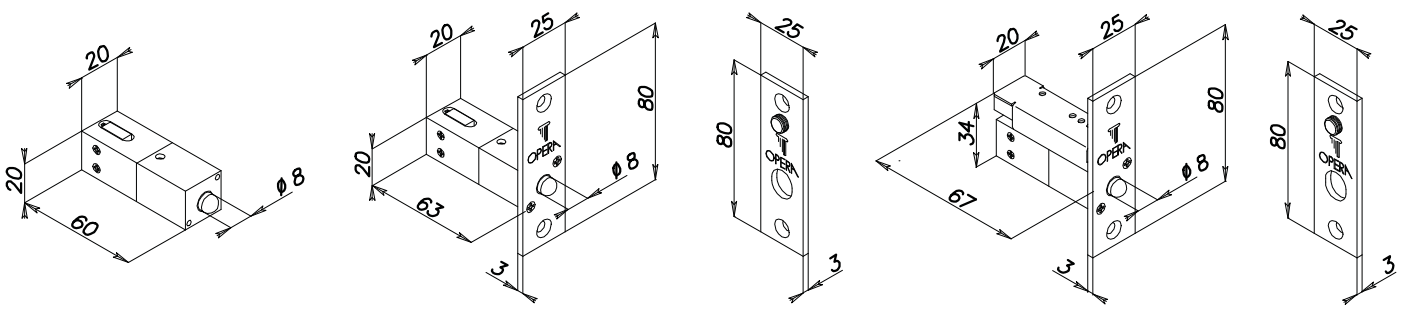

Note: The **Quadra Micro** series solenoid lock, due to the high operating temperatures, are not suitable for mounting on wood or PVC doors

Art.	Description	€

MICRO SOLENOID LOCK - FAIL SECURE

Closed without power
Striking plate in stainless steel (mm) 80 x 25 x 3
Armature plate in stainless steel (mm) 80 x 25 x 3
with magnet adjustable in extension (only Art. 20810)
Deadbolt diameter (mm) 8, extension 8
Operating voltage: 12 Vdc/400mA or 24Vdc/200mA - ED 100%
Mode of operation: horizontal (vertical on request see page 129)
Deadbolt position micro-switch C./N.O./N.C

20810-12	12V - With N.O. magnetic door position sensor*	**254,20**
20811-12	12V - Without magnetic sensor	**234,80**
20810-24	24V - With N.O. magnetic door position sensor*	**254,20**
20811-24	24V - Without magnetic sensor	**234,80**

* For connection to central control unit 54610A

20812

MICRO SOLENOID LOCK WITH INTERNAL ELECTRONIC

342,00

Fail secure
Front plate and striking plate in stainless steel mm 80 x 25 x 3
Striking plate with adjustable magnet for door status position
Bolt dimensions: diameter 8 mm, extension 8
Operating voltage: 12Vdc - 400 mA peak, 270 mA for maintenance
24Vdc - 300 mA peak, 150 mA for maintenance
Internal microprocessor control electronic
Rapid plug-in connector
Bolt position free voltage contact C. / N.O. / N.C.

Push buttons for monitoring and adjustment of reclosing times from 0-5 sec. to approach of door and from 0-60 sec. if the door is not opened

Mode of operation: horizontal (vertical on request see page 129)

MICRO SOLENOID LOCK - FAIL SECURE

Closed without power
Deadbolt diameter (mm) 8, extension 11 (8 mm. stroke)
Operating voltage: 12 Vdc/400mA or 24Vdc/200mA - ED 100%
Mode of operation: horizontal (vertical on request see page 129)
Deadbolt position micro-switch C./N.O./N.C

20813-12	12 V	**165,30**
20813-24	24 V	**165,30**

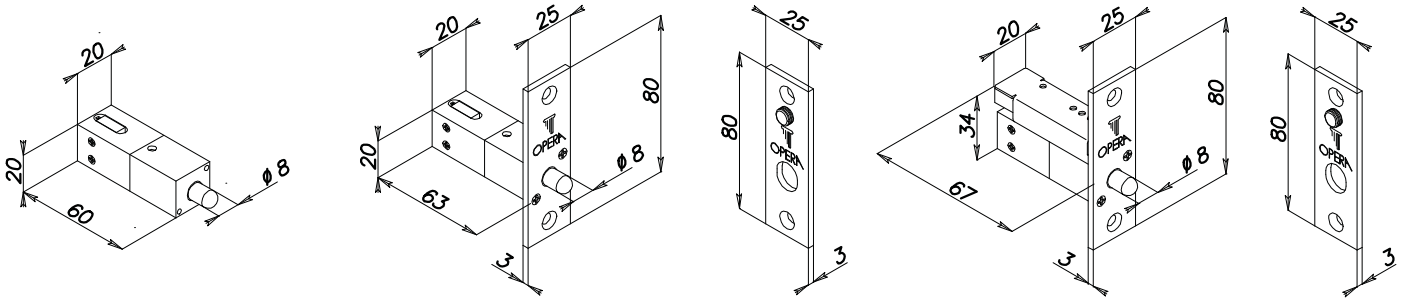

Note: The **Quadra Micro** series solenoid lock, due to the high operating temperatures, are not suitable for mounting on wood or PVC doors

Art.	Description	€

MICRO SOLENOID LOCK WITH LATCH

Closed without power
Striking plate in stainless steel (mm) 80 x 25 x 3
Armature plate in stainless steel (mm) 80 x 25 x 3 with magnet adjustable in extension (only Art. 20910)
Latch diameter (mm) 8, extension 8
Operating voltage: 12 Vdc/400mA or 24Vdc/200mA - ED 100%
Mode of operation: horizontal (vertical on request see page 129)
Deadbolt position micro-switch C./N.O./N.C

20910-12	12V - With N.O. magnetic door position sensor	**273,60**
20911-12	12V - Without magnetic sensor	**254,20**
20910-24	24V - With N.O. magnetic door position sensor	**273,60**
20911-24	24V - Without magnetic sensor	**254,20**

MICRO SOLENOID LOCK WITH LATCH

Closed without power
Latch diameter (mm) 8, extension 12 (8 mm. stroke)
Operating voltage: 12 Vdc/400mA or 24Vdc/200mA - ED 100%
Mode of operation: horizontal (vertical on request see page 129)
Deadbolt position micro-switch C./N.O./N.C

20913-12	12 V	**185,80**
20913-24	24 V	**185,80**

MICRO SOLENOID LOCK WITCH LATCH - FAIL SAFE

Open without power
Striking plate in stainless steel (mm) 80 x 25 x 3
Armature plate in stainless steel (mm) 80 x 25 x 3
with magnet adjustable in extension (only Art. 20910A)
Latch diameter (mm) 8, extension 8
Operating voltage: 12 Vdc/400mA or 24Vdc/200mA - ED 100%
Mode of operation: horizontal (vertical on request see page 129)
Deadbolt position micro-switch C./N.O./N.C

20910A-12	12V - With N.O. magnetic door position sensor	**273,60**
20911A-12	12V - Without magnetic sensor	**254,20**
20910A-24	24V - With N.O. magnetic door position sensor	**273,60**
20911A-24	24V - With magnetic sensor	**254,20**

MICRO SOLENOID LOCK WITH LATCH - FAIL SAFE

Open without power
Latch diameter (mm) 8, extension 12 (8 mm. stroke)
Operating voltage: 12 Vdc/400mA or 24Vdc/200mA - ED 100%
Mode of operation: horizontal (vertical on request see page 129)
Deadbolt position micro-switch C./N.O./N.C

20913A-12	12 V	**185,80**
20913A-24	24 V	**185,80**

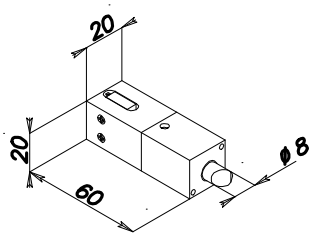

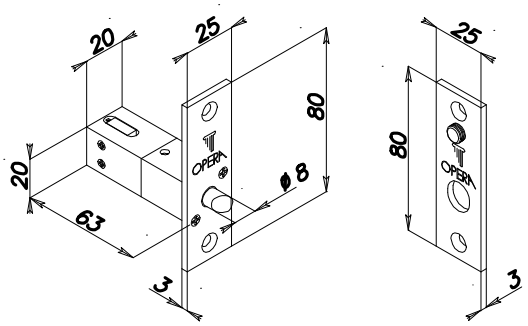

Note: The **Quadra Micro** series solenoid lock, due to the high operating temperatures, are not suitable for mounting on wood or PVC doors

Art.	Description	€
	MICRO SOLENOID LOCK - FAIL SAFE Open without power Striking plate in stainless steel (mm) 80 x 25 x 3 Armature plate in stainless steel (mm) 80 x 25 x 3 with magnet adjustable in extension (only Art. 20610XS) Deadbolt diameter (mm) 8, extension 8 Operating voltage: 12 Vdc/400mA or 24Vdc/200mA - ED 100% Mode of operation: horizontal (vertical on request see page 129)	
20610XS-12	12V - With N.O. magnetic door position sensor	**242,80**
20611XS-12	12V - Without magnetic sensor	**222,30**
20610XS-24	24V - With N.O. magnetic door position sensor	**242,80**
20611XS-24	24V - Without magnetic sensor	**222,30**
	MICRO SOLENOID LOCK - FAIL SAFE Open without power Deadbolt diameter (mm) 8, extension 11 (8 mm. stroke) Operating voltage: 12 Vdc/400mA or 24Vdc/200mA - ED 100% Mode of operation: horizontal (vertical on request see page 129)	
20613XS-12	12 V	**153,90**
20613XS-24	24 V	**153,90**
Art. + AM	**On request:** mechanical release with knob (see page 113)	**+ 9,50**
	MICRO SOLENOID LOCK - FAIL SECURE Closed without power Striking plate in stainless steel (mm) 80 x 25 x 3 Armature plate in stainless steel (mm) 80 x 25 x 3 with magnet adjustable in extension (only Art. 20810XS) Deadbolt diameter (mm) 8, extension 8 Operating voltage: 12 Vdc/400mA or 24Vdc/200mA - ED 100% Mode of operation: horizontal (vertical on request see page 129)	
20810XS-12	12V - With N.O. magnetic door position sensor	**242,80**
20811XS-12	12V - Without magnetic sensor	**222,30**
20810XS-24	24V - With N.O. magnetic door position sensor	**242,80**
20811XS-24	24V - Without magnetic sensor	**222,30**
	MICRO SOLENOID LOCK - FAIL SECUREE Closed without power Deadbolt diameter (mm) 8, extension 11 (8 mm. stroke) Operating voltage: 12 Vdc/400mA or 24Vdc/200mA - ED 100% Mode of operation: horizontal (vertical on request see page 129)	
20813XS-12	12 V	**153,90**
20813XS-24	24 V	**153,90**
Art. + AM	**On request:** mechanical release with knob (see page 113))	**+ 9,50**

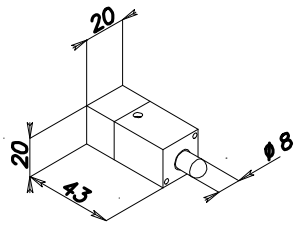

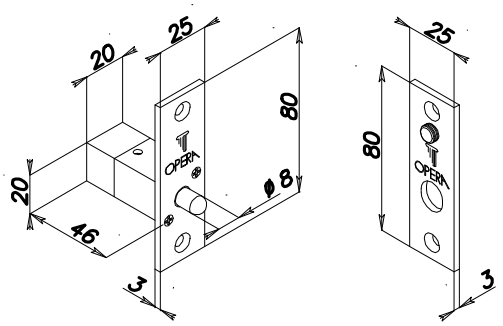

Note: The **Quadra Micro** series solenoid lock, due to the high operating temperatures, are not suitable for mounting on wood or PVC doors

Art.	Description	€
	MICRO SOLENOID LOCK WITH LATCH - FAIL SECURE Closed without power Striking plate in stainless steel (mm) 80 x 25 x 3 Armature plate in stainless steel (mm) 80 x 25 x 3 with magnet adjustable in extension (only Art. 20910XS) Latch diameter (mm) 8, extension 8 Operating voltage: 12 Vdc/400mA or 24Vdc/200mA - ED 100% Mode of operation:horizontal (vertical on request see page 129)	
20910XS-12	12V - With N.O. magnetic door position sensor	**261,10**
20911XS-12	12V - Without magnetic sensor	**241,70**
20910XS-24	24V - With N.O. magnetic door position sensor	**261,10**
20911XS-24	24V - Without magnetic sensor	**241,70**
	MICRO SOLENOID LOCK WITH LATCH - FAIL SECURE Closed without power Latch diameter (mm) 8, extension 11 (8 mm. stroke) Operating voltage: 12 Vdc/400mA or 24Vdc/200mA - ED 100% Mode of operation:horizontal (vertical on request see page 129)	
20913XS-12	12 V	**173,30**
20913XS-24	24 V	**173,30**
Art. + AM	**On request:** mechanical release with knob (see page 113)	**+ 9,50**
	MICRO SOLENOID LOCK WITH LATCH - FAIL SAFE Open without power Striking plate in stainless steel (mm) 80 x 25 x 3 Armature plate in stainless steel (mm) 80 x 25 x 3 with magnet adjustable in extension (only Art. 20910XSA) Latch diameter (mm) 8, extension 8 Operating voltage: 12 Vdc/400mA or 24Vdc/200mA - ED 100% Mode of operation:horizontal (vertical on request see page 129)	
20910XSA-12	12V - With N.O. magnetic door position sensor	**261,10**
20911XSA-12	12V - Without magnetic sensor	**241,70**
20910XSA-24	24V - With N.O. magnetic door position sensor	**261,10**
20911XSA-24	24V - Without magnetic sensor	**241,70**
	MICRO SOLENOID LOCK WITH LATCH - FAIL SAFE Open without power Latch diameter (mm) 8, extension 11 mm (8 mm. stroke) Operating voltage: 12 Vdc/400mA or 24Vdc/200mA - ED 100% Mode of operation:horizontal (vertical on request see page 129)	
20913XSA-12	12 V	**173,30**
20913XSA-24	24 V	**173,30**
Art. + AM	**On request:** mechanical release with knob (see page 125)	**+ 9,50**

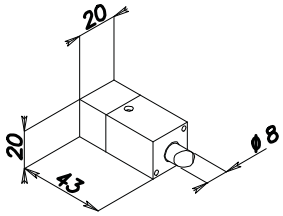

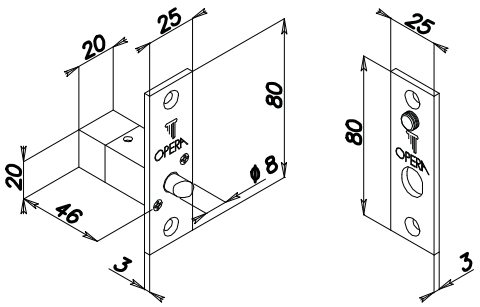

Note: The **Quadra Micro** series solenoid lock, due to the high operating temperatures, are not suitable for mounting on wood or PVC doors

	Art.	Description	€
		SECURITY SOLENOID LOCK - FAIL SAFE Open without power Striking plate in stainless steel mm 100 x 40 x 3 Armature plate in stainless steel mm 100 x 40 x 3 with magnet adjustable in extension (only Art. 21610) Deadbolt diameter (mm) 12, extension 18 Operating voltage: 12 Vdc/900mA or 24Vdc/450mA - ED 100% Mode of operation: horizontal (vertical on request see page 129) Deadbolt position micro-switch C./N.O./N.C	
	21610	With N.O. magnetic door position sensor *	**254,20**
	21611	Without magnetic sensor	**234,80**
		* For connection to central control unit 54610A	
	21612	**SOLENOID LOCK WITH INTERNAL ELECTRONIC - FAIL SAFE** Open without power Front plate and striking plate in stainless steel mm 100 x 40 x 3 Striking plate mm 100 x 40 x 3 with adjustable magnet for door status position Bolt dimensions: diameter 12 mm, extension 18 Operating voltage: 12Vdc - 800 mA peak, 550 mA for maintenance 24Vdc - 500 mA peak, 350 mA for maintenance Internal microprocessor control electronic Rapid plug-in connector Bolt position free voltage contact C. / N.O. / N.C. Push buttons for monitoring and adjustment of reclosing times from 0-5 sec. To approach of door and from 0-60 sec. If the door is not opened Mode of operation: horizontal (vertical on request see page 129)	**342,00**
	21613	**SECURITY SOLENOID LOCK - FAIL SAFE** Open without power Deadbolt diameter (mm) 12, extension 21 (18 mm. stroke) Operating voltage: 12 Vdc/900mA or 24Vdc/450mA - ED 100% Mode of operation: horizontal (vertical on request see page 129) Deadbolt position micro-switch C./N.O./N.C	**165,30**
	Art. + AM	**On request:** mechanical release with knob (see page 125)	**+ 9,50**

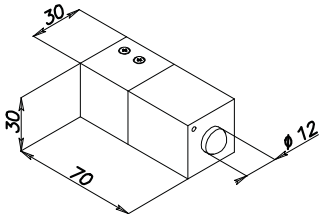

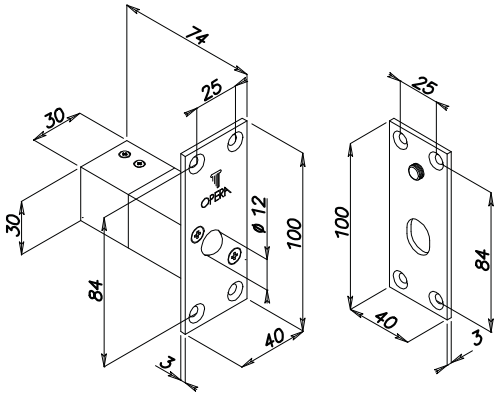

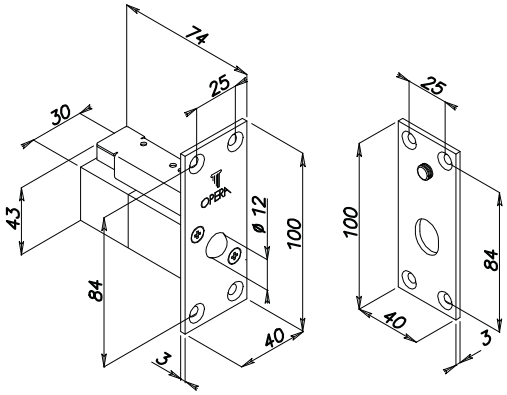

Note: The **Quadra Micro** series solenoid lock, due to the high operating temperatures, are not suitable for mounting on wood or PVC doors

Art.	Description	€

SECURITY SOLENOID LOCK - FAIL SECURE

Closed without power
Striking plate in stainless steel mm 100 x 40 x 3
Armature plate in stainless steel mm 100 x 40 x 3
with magnet adjustable in extension (only Art. 21810)
Deadbolt diameter (mm) 12, extension 18
Operating voltage: 12 Vdc/900mA or 24Vdc/450mA - ED 100%
Mode of operation: horizontal (vertical on request see page 129)
Deadbolt position micro-switch C./N.O./N.C

21810	With N.O. magnetic door position sensor *	**254,20**
21811	Without magnetic sensor	**234,80**

* For connection to central control unit 54610A

21812 — **342,00**

SECURITY SOLENOID LOCK WITH INTERNAL ELECTRONIC - FAIL SECURE

Front plate and striking plate in stainless steel mm 100 x 40 x 3
Striking plate mm 100 x 40 x 3 with adjustable magnet for door status position
Bolt dimensions: diameter 12 mm, extension 18 mm
Operating voltage: 12Vdc - 800 mA peak, 450 mA for maintenance
24Vdc - 500 mA peak, 250 mA for maintenance
Internal microprocessor control electronic
Rapid plug-in connector
Bolt position free voltage contact C. / N.O. / N.C.

Push buttons for monitoring and adjustment of reclosing times from 0-5 sec. To approach of door and from 0-60 sec. If the door is not opened.

Mode of operation: horizontal (vertical on request see page 129)

21813 — **165,30**

SECURITY SOLENOID LOCK - FAIL SECURE

Closed without power
Deadbolt diameter (mm) 12, extension 21 (18 mm. stroke)
Operating voltage: 12 Vdc/900mA or 24Vdc/450mA - ED 100%
Mode of operation: horizontal (vertical on request see page 129)
Deadbolt position micro-switch C./N.O./N.C

Art. + AM	**On request:** mechanical release with knob (see page 125)	**+ 9,50**

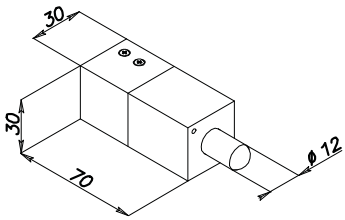

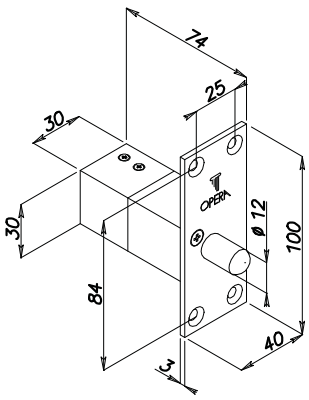

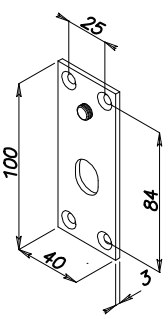

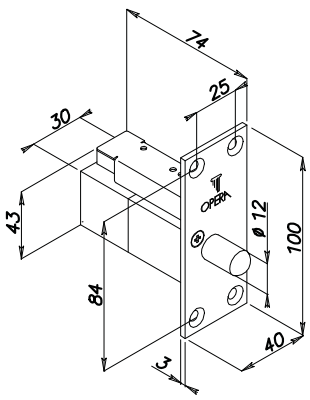

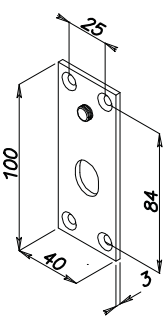

Note: The **Quadra Micro** series solenoid lock, due to the high operating temperatures, are not suitable for mounting on wood or PVC doors

Art.	Description	€
	SECURITY SOLENOID LOCK WITH LATCH - FAIL SECURE Closed without power Striking plate in stainless steel (mm) 100 x 40 x 3 Armature plate in stainless steel (mm) 100 x 40 x 3 with magnet adjustable in extension (only Art. 21910) Lock body dimensions (mm): 70 x 30 x 30 See drawing at page 112 Latch diameter (mm) 12, extension 14 mm. Operating voltage: 12 Vdc/900mA or 24Vdc/450mA - ED 100% Mode of operation: horizontal (vertical on request see page 129) Monitored latch position micro-switch C./N.O./N.C	
21910	With N.O. magnetic door position sensor	**273,60**
21911	Without magnetic sensor	**254,20**

21913	**SECURITY SOLENOID LOCK WITH LATCH - FAIL SECURE** Closed without power Lock body dimensions (mm) 70 x 30 x 30: See drawing at page 112 Latch diameter (mm) 12, extension 17 mm (14 mm. stroke) Operating voltage: 12 Vdc/900mA or 24Vdc/450mA - ED 100% Mode of operation: horizontal (vertical on request see page 129) Monitored latch position micro-switch C./N.O./N.C	**185,80**
Art. + AM	**On request:** mechanical release with knob (see below)	**+ 9,50**

MECHANICAL RELEASE WITH KNOB

1

2

3

4

Note: The **Quadra Micro** series solenoid lock, due to the high operating temperatures, are not suitable for mounting on wood or PVC doors

Art.	Description	€
	SECURITY SOLENOID LOCK - FAIL SAFE Open without power Operating voltage: 12 Vdc/900mA or 24Vdc/450mA - ED 100% Deadbolt diameter (mm) 12, extension 18 mm. Ready for European profile cylinder for key opening Mode of operation: horizontal (vertical on request see page 129) Deadbolt position micro-switch C./N.O./N.C	
21614	With N.O. magnetic door position sensor *	**311,20**
21615	Without magnetic sensor	**291,80**
Art. + S	With cylinder with needle key	**+ 43,30**
	* For connection to central control unit 54610A	

21616	**SOLENOID LOCK WITH INTERNAL ELECTRONIC - FAIL SAFE** Front plate and striking plate in stainless steel Striking plate with adjustable magnet for door status position Bolt dimensions: diameter 12 mm, extension 18 Operating voltage: 12Vdc - 800 mA peak, 550 mA for maintenance 24Vdc - 500 mA peak, 350 mA for maintenance Internal microprocessor control electronic Rapid plug-in connector Bolt position free voltage contact C. / N.O. / N.C. Ready for European profile cylinder for key opening Push buttons for monitoring and adjustment of reclosing times from 0-5 sec. to approach of door and from 0-60 sec. If the door is not opened Mode of operation: horizontal (vertical on request see page 129)	**399,00**
Art. + S	With cylinder with needle key	**+ 43,30**

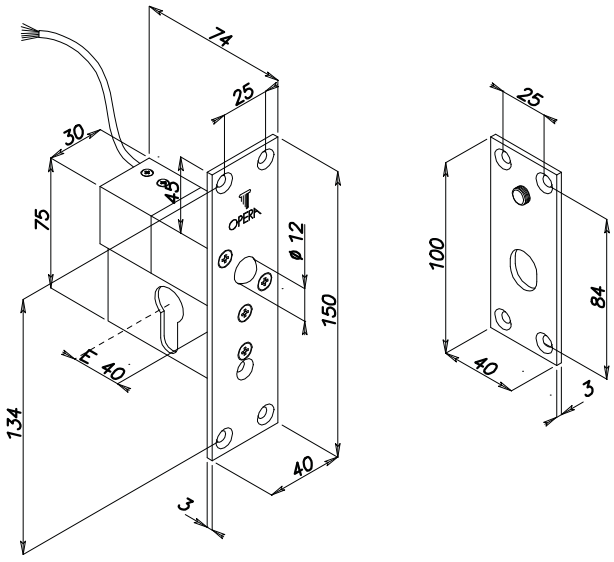

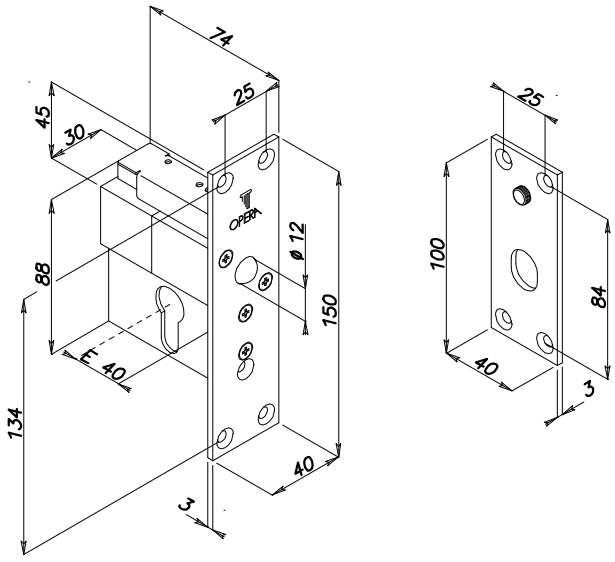

Art.	Description	€

SECURITY SOLENOID LOCK - FAIL SECURE

Closed without power
Operating voltage: 12 Vdc/900mA or 24Vdc/450mA - ED 100%
Deadbolt diameter (mm) 12, extension 18 mm.
Ready for European profile cylinder for key opening
Mode of operation: horizontal (vertical on request see page 129)
Deadbolt position micro-switch C./N.O./N.C

21814	With N.O. magnetic door position sensor *	**311,20**
21815	Without magnetic sensor	**291,80**
Art. + S	With cylinder with needle key	**+ 43,30**

* For connection to central control unit 54610A

21816 — **399,00**

SECURITY SOLENOID LOCK WITH INTERNAL ELECTRONIC- FAIL SECURE

Striking plate with adjustable magnet for door status position
Bolt dimensions: diameter 12 mm, extension 18 mm
Operating voltage: 12Vdc - 800 mA peak, 450 mA for maintenance
24Vdc - 500 mA peak, 250 mA for maintenance
Internal microprocessor control electronic
Rapid plug-in connector
Bolt position free voltage contact C. / N.O. / N.C.
Ready for European profile cylinder for key opening

Push buttons for monitoring and adjustment of reclosing times from 0-5 sec. to approach of door and from 0-60 sec. If the door is not opened

Mode of operation: horizontal (vertical on request) - see page 129

Art. + S	With cylinder with needle key	**+ 43,30**

SECURITY SOLENOID LOCK WITH LATCH - FAIL SECURE

Closed without power
Latch diameter (mm) 12, extension 14 mm.
Power suffly: 12 Vdc/900mA o 24Vdc/450mA - ED 100%
Ready for European profile cylinder for key opening
Mode of operation: horizontal (vertical on request see page 129)
Monitored latch position micro-switch C./N.O./N.C

21914	With N.O. magnetic door position sensor	**330,60**
21915	Without magnetic sensor	**311,20**
Art. + S	With cylinder with needle key	**+ 43,30**

L 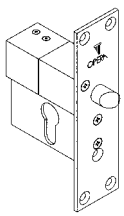

R 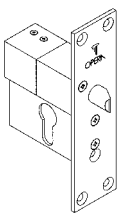

Note: indicate the lock hand (right or left hand)

Art.	Description	€

BRACKET FOR SIDE MOUNTING OF THE HORIZONTAL SOLENOID LOCK

Pair of brackets for solenoid lock and Armature plate in black painted steel
Dimensions of bracket for solenoid lock and Armature plate:
Quadra Micro series (mm) 32 x 24 x 22
Quadra series (mm) 32 x 32 x 30

02060	Quadra Micro series	17,80
02160	Quadra series	17,80

Use: carter for surface mounting of the horizontal security solenoid lock Quadra and Quadra Micro series

CARTER FOR HORIZONTAL SOLENOID LOCK

Solenoid lock and Armature plate carter body in black painted steel
Carter for solenoid lock dimensions:
Quadra Micro series (mm) 74 x 26 x 26
Quadra series (mm) 93 x 35 x 35
Armature plate dimensions:
Quadra Micro series (mm) 25 x 25 x 26
Quadra series (mm) 30 x 30 x 32

02065	Quadra Micro series (already inclusive of Art. 02060)	81,80
02165	Quadra series (already inclusive of Art. 02160)	81,80

Use: carter for surface mounting of the horizontal security solenoid lock Quadra and Quadra Micro series

Packaging: solenoid lock carter, Armature plate carter, side mounting bracket and screws

STRIKING PLATE WITH KEY OPENING MECHANISM

Striking plate in stainless steel
Striking plate dimensions (mm): 150 x 40 x 3
Body in anodized aluminium
Dimensions of the body (mm): 70 x 45 x 20
Cylinder backset (mm): 40

02114	For standard European profile cylinder	71,10
02114S	With needle cylinder	116,20

Use: accessory for use with horizontal security solenoid lock series 216, 218, 219.

STRIKING PLATE FOR SOLENOID BOLT QUADRA MICRO SERIES

Striking plate in stainless steel mm 80 x 25 x 3

02208	Without magnet	33,20
02208R	With adjustable magnet	37,90

STRIKING PLATE FOR SOLENOID BOLT QUADRA SERIES

Striking plate in stainless steel mm 100 x 40 x 3

02218	Without magnet	33,20
02218R	With adjustable magnet	37,90

Note: The **Quadra Micro** series solenoid lock, due to the high operating temperatures, are not suitable for mounting on wood or PVC doors

Art.	Description	€
05216	**PWM CIRCUIT** Circuit dimensions: 70 x 20 mm hput power supply: 12 - 18 Vdc (polarized) Output: relay Com. / N.O. / N.C. for bolt status **Use:** Circuit for the management of the maintenance of the coils of the Quadra and Quadra Micro solenoid bolts series, preventing overheating when kept powered for long periods. Quadra Micro power supply: 800mA peak and 180mA maintenance at 12Vdc Quadra power supply: 900mA peak and 250mA maintenance at 12Vdc **Note:** For all Quadra and Quadra Micro electro-bolts series powered at 12Vdc.	70,00

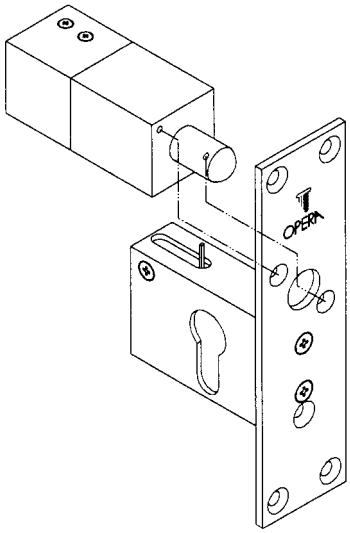

Assembling of key opening mechanism

BRACKETS AND COVER APPLICATION EXAMPLES

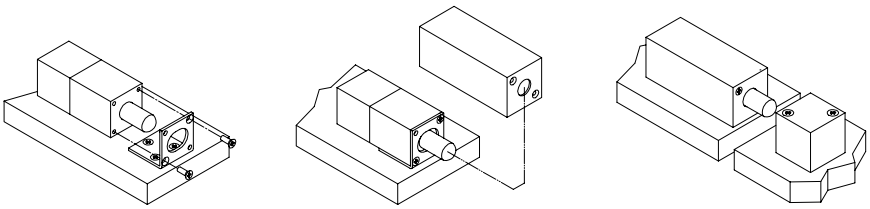

APPLICATIONS SAMPLES WITH MODE OF INSTALLATION

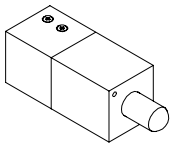

Standard

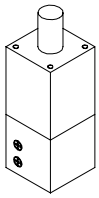

Vertical upwards

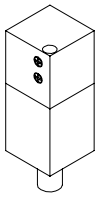

Vertical downwards

INTERLOCKED SYSTEM WITH QUADRA LOCKS

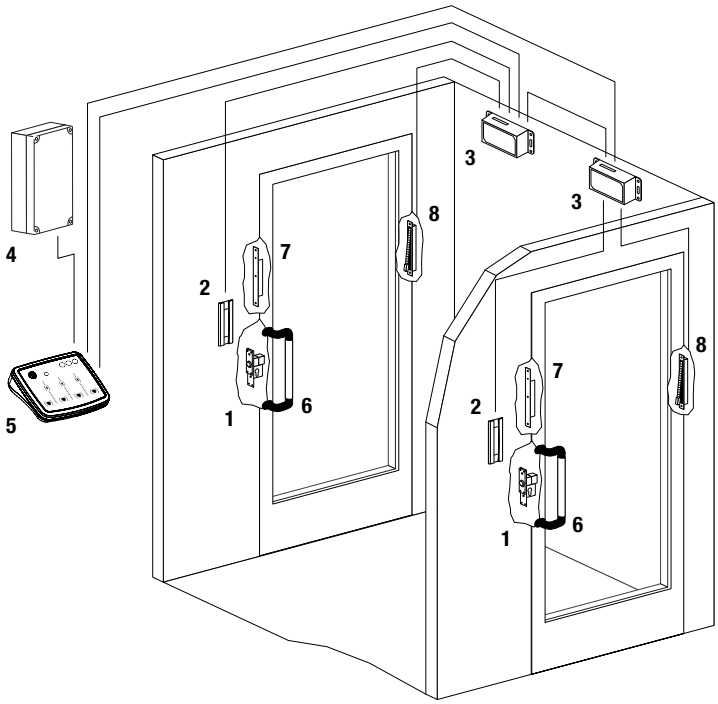

LEGENDA

1 Solenoid locks
2 Indicator lamps
3 Control unit
4 Power supply
5 Desktop console
6 Sensitive bars
7 Sensitive cards
8 Lead covers

ARCA

- SECURITY SOLENOID LOCKS
- KEY VERSION FOR SAFE-DEPOSIT BOXES AND STRONG-BOXES
- SLIDE VERSION FOR AUTOMATIC SLIDING DOORS
- ENTIRELY IN STAINLESS STEEL FOR EXPOSURE TO WEATHER CONDITIONS
- MANUAL ACTIVATION WITH EUROPEAN CYLINDER

OPERA

ARCA

www.opera-italy.com

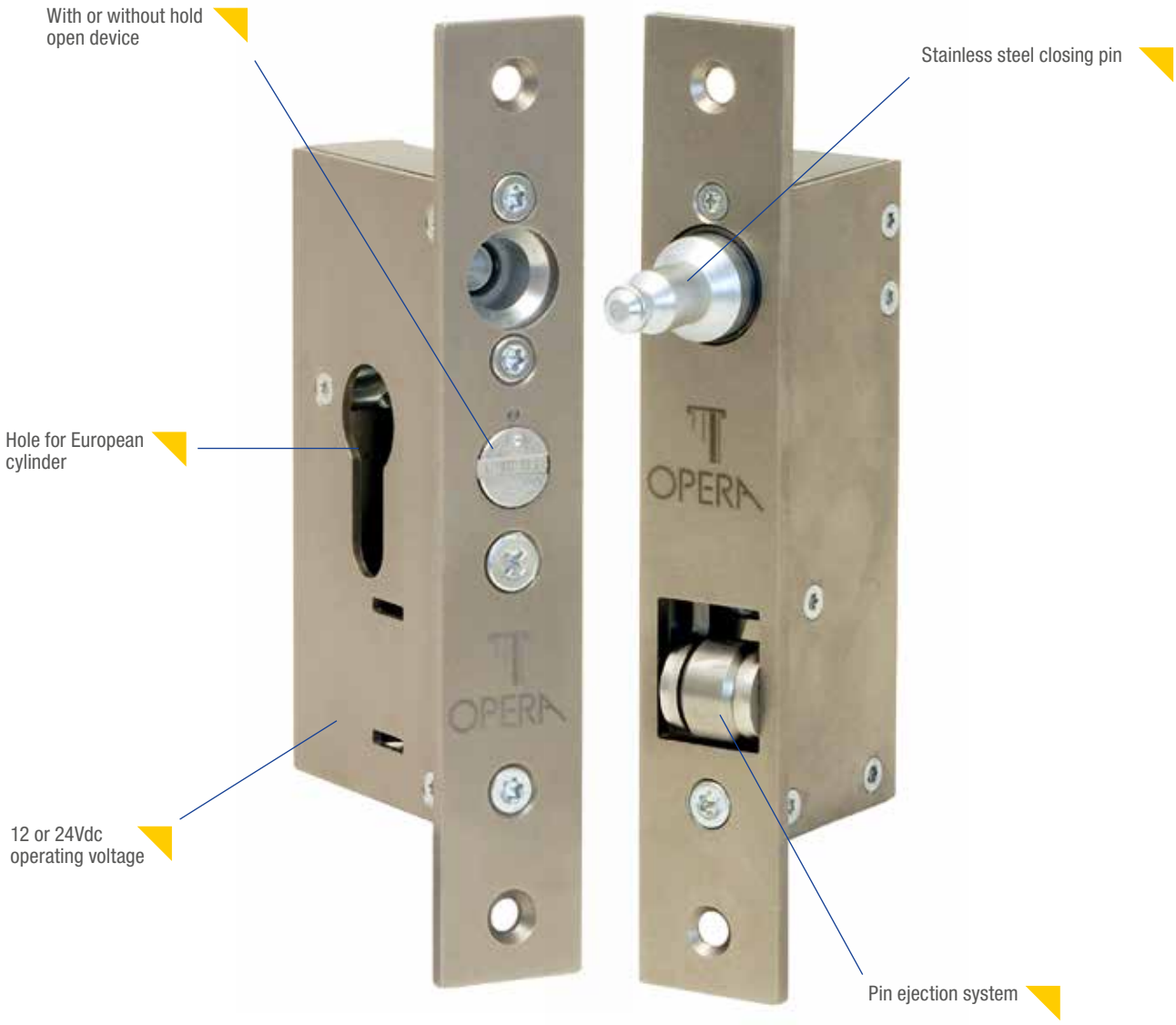

PLUS

- Innovative electric lock for sliding doors
- High resistance to breaking and entering, over 800 kg
- Locked without power supply
- Mechanical opening by European cylinder
- Internal micro switch for door status signalling
- Striking plate with retractable pin when the door is open

INTERNAL OPENING

EXTERNAL OPENING

PLUS EXAMPLE

1 For 1 or 2 shutters sliding doors
2 No need of management electronics
3 Mechanical closure at shutters approach
4 For motorized sliding doors or sliding gates
5 To be matched with intercom and access control system

WATCH THE VIDEO

Art.	Description	€
22800M	**ELECTRIC LOCK FOR CABINET - FAIL SECURE** Housing in black ABS **Fail locked - motor operated** Plt includes lock and door status monitoring outputs Operating voltage: 12-28 Vac/dc - Absorbed current: 165mA Holding force: 100Kg Can be fitted to drawers, filing cabinets, drug cabinets, gym lockers Compatible with existing keypads or readers Can be integrated with access control system Operating temperature range: -10°C +45°C Adjustable re-locking time from 2 to 5 sec	136,30
00228	Spacer - 1mm thickness in stainless steel for counterplate	1,80

00228

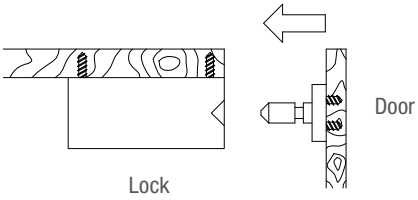

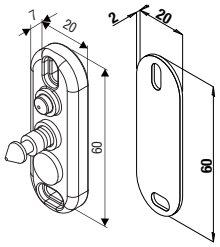

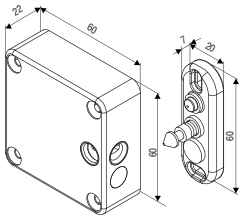

22800MBR	**BATTERY OPERATED ELECTRIC LOCK** Body in black ABS **Fail secure** Steel nickel plated bolt Double socket lock for lockers and drawers Holding force: Kg. 170 Power supply: 4 x AAA Alkaline batteries Low battery alarm and 10% low battery automatically unlock Cable for emergency power supply Opening by Mifare / IC Card / 13,56MHz - max 13 cards recordable Motorised lock	177,80

	TRASPONDER CARDS RFID CARD Mifare 13,56 MHz Dimensions mm. 86 x 54 x 0,8	
55516	White	10,40
55516SLA	Custom silk screen on main side	12,50
55516SLB	Custom silk screen on both side	14,00

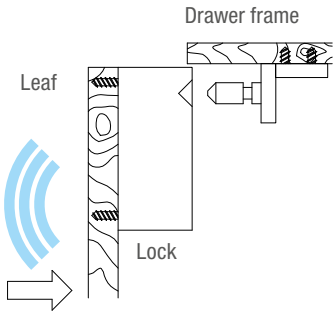

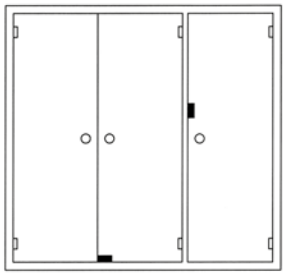

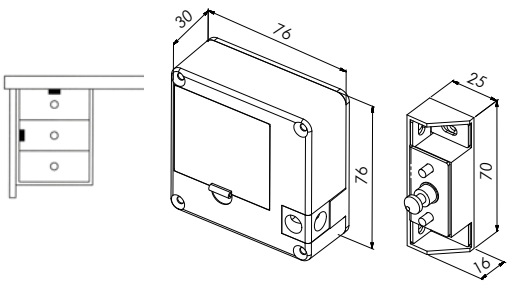

Common characteristics: Stainless steel body. Nickeled tempered steel block pin on stainless steel counterplate. Strength of resistance to breaking and entering: 800 kg. Insertion of the front panel block pin.
Use: safety closure, can be electrically controlled for the closuring of cabinet doors and safety lockers.

Art.	Description	€
	SECURITY ELECTRIC LOCK Locked without power supply Stainless steel front plate Stainless steel counterplate, extension can be adjusted from 21 to 27 mm Pin diameter 9.5 mm. extension 25 mm Power supply: 12 or 24 Vdc Current absorbed: 1,000 mA at 12 V/500 mA at 24 V Opening: limited to the duration of the impulse with current limiter C. / N.A. / N.C. microswitch of inserted pin position	
22912	Power supply: 12 Vdc	**310,60**
22924	Power supply: 24 Vdc	**310,60**
22912CS	Power supply: 12 Vdc - with pin cylinder for opening with key	**335,50**
22924CS	Power supply: 24 Vdc - with pin cylinder for opening with key	**335,50**

APPLICATIONS EXAMPLES

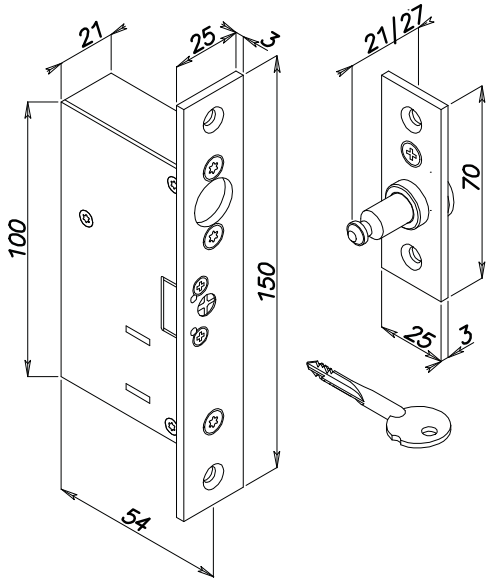

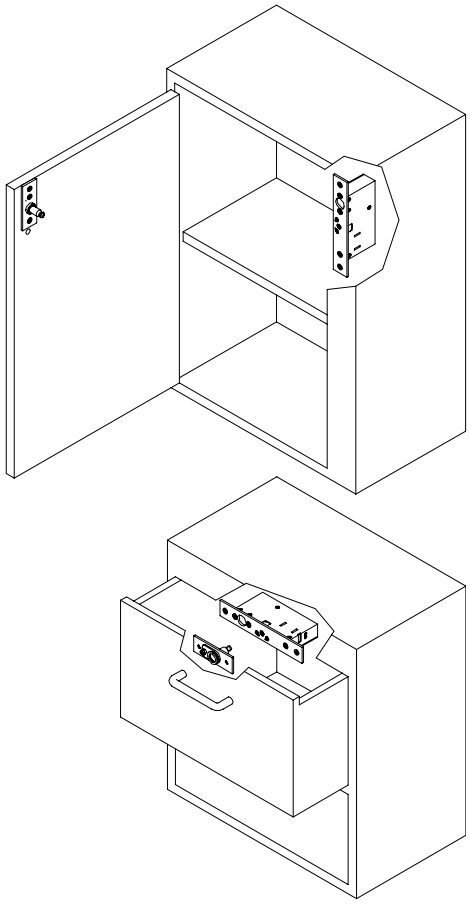

NEW

Art.	Description	€
	ROTARY ELECTRIC LOCK LOCK body and strikiNG plate in stainless steel hternal electronic circuit with microcontroller Electronic opening control through a cean N.O. contact. wechanical closing when the door is closed Connections via snap-in connector. Safety mechanical unlock with manual pull. N.O./N.C. indication of the lock's open/close status. Power supply: 12 ÷ 24 Voc polarized Peak curent: 150 mA at 12 V I 75 mA at 24 V lole current: 24 mA at 12 V I 12 mA at 24 V **Use:** Electronically operated lock with high load capacity rotary closure for cabinets, drawers, and show cases	
22912A	Version without front plate - Front or side mounting	**262,00**
22912AF	Version with stainless steel front plate	**283,00**

APPLICATION EXAMPLES

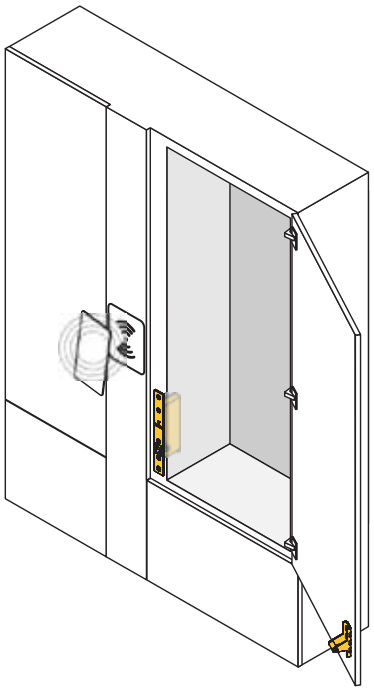

SAFE COMPARTMENTS AND DRAWERS
Locking mechanism for compartments containing sensitive items, with a locking mechanism even in the absence of power. Unlocking can be controlled by remote opening systems with the ability to indicate the actual open or closed status.

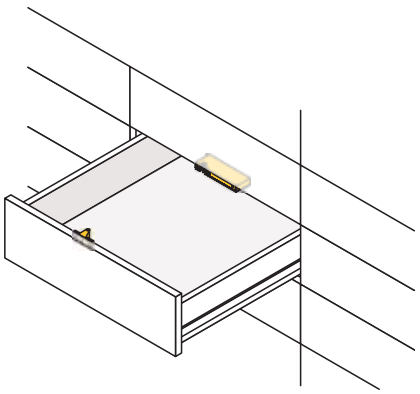

CABINET WITH CARD READER (RFID) OPENING
Locking system for locker cabinets in gym changing rooms, swimming pools, laboratories, hospitals, offices. Electronic unlocking controllable by RFID readers or other pre-installed authentication systems. Mechanical unlock via pull mechanism to ensure the possibility of opening even in the absence of power. Easily integrable into systems for automated product delivery.

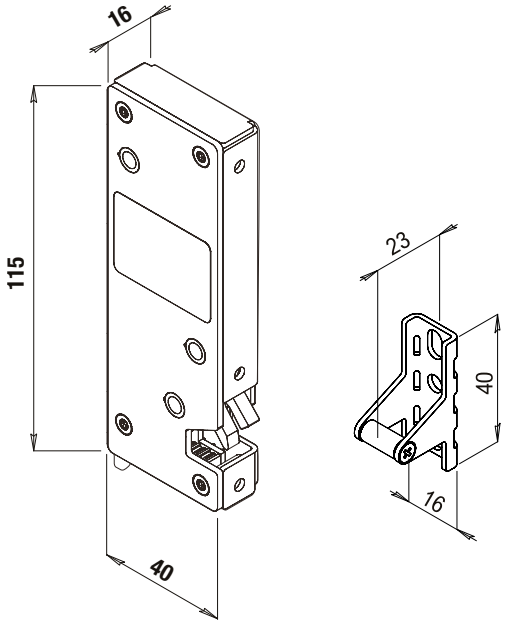

Art. 22912A

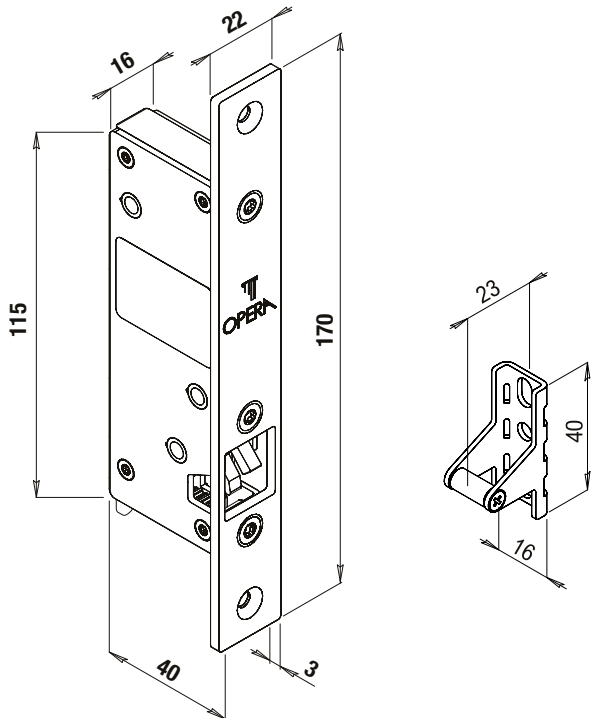

Art. 22912AF

FIXING EXAMPLES

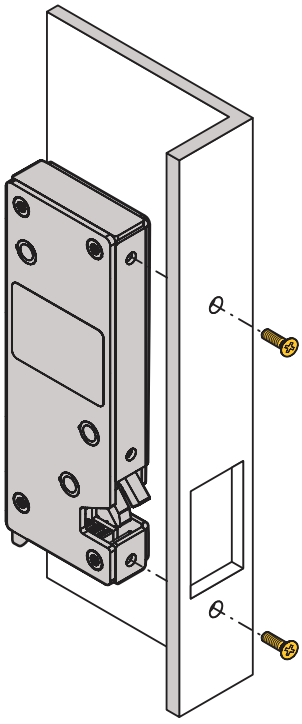

Art. 22912A
Front fixing

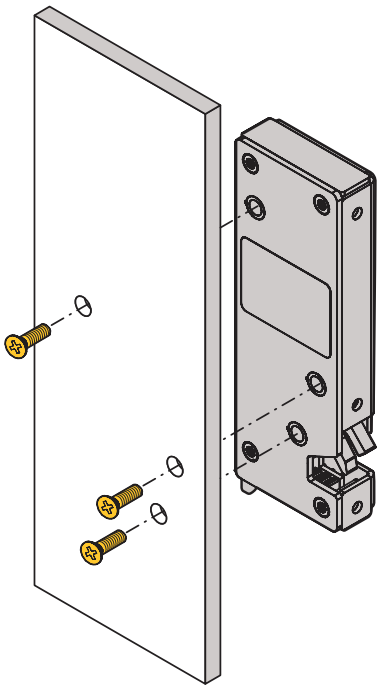

Art. 22912A
Side fixing

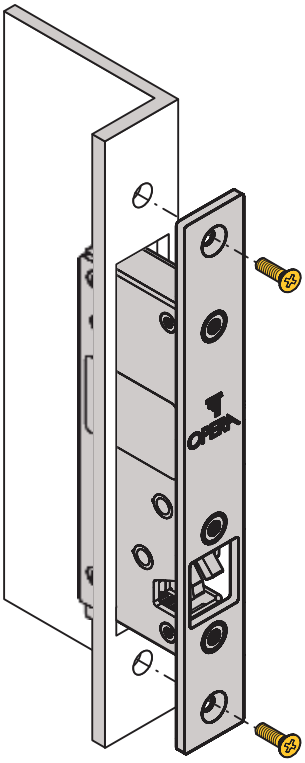

Art. 22912AF
Front fixing

NEW

Art.	Description	€
	ELECTRIC LOCK FOR CABINETS Electric body and striking plate in stainless steel Pin diameter 9.5mm, extension 25mm Power supply: 12 or 24 Vdc Opening: limited to the duration of the pulse, with current limiter Mechanical relocking upon door closure Safety mechanical release through manual pull rod. Microswitch C. / N.O. / N.C. indicating the lock's open/closed status Burglary resistance force: 800Kg **Use:** Electric lock for cabinet, drawers and security showcase.	
22922S	Version without front plate - 12 Vdc	**310,00**
22924S	Version without front plate - 24 Vdc	**310,00**
22922SF	Version with front plate - 12 Vdc	**326,00**
22924SF	Version with front plate - 24 Vdc	**326,00**

APPLICATION EXAMPLES

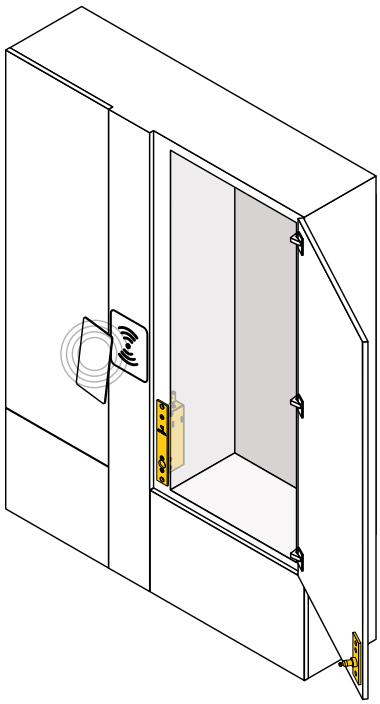

SAFE COMPARTMENTS AND DRAWERS
Locking mechanism for compartments containing sensitive items, with a locking mechanism even in the absence of power. Unlocking can be controlled by remote opening sytems with the ability to indicate the actual open or closed status.

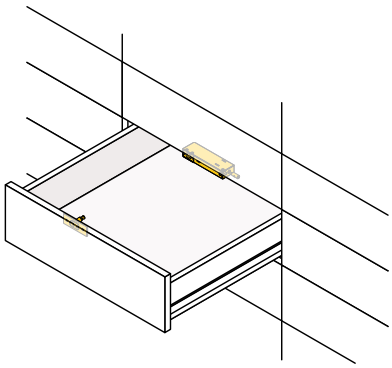

CABINET WITH CARD READER (RFID) OPENING
Locking system for locker cabinets in gym changing rooms, swimming pools, laboratories, hospitals, offices. Electronic unlockng controllable by RFID readers or other pre- installed authentication systems. Mechanical unlock via pull mechanism to ensure the possibility of opening even in the absence of power. Easily integrable into systems for automated product delivery.

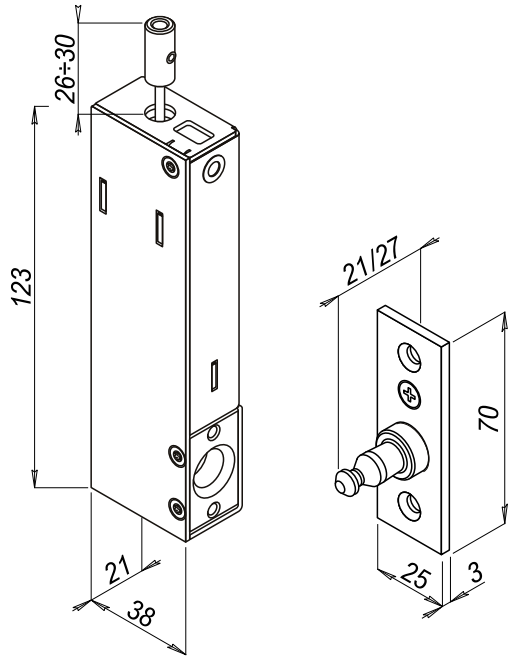

Art. 22922S - 22924S

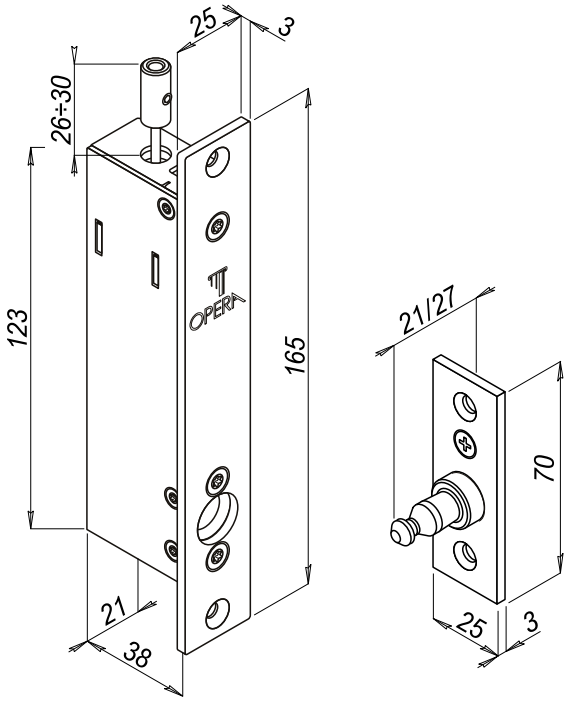

Art. 22922SF - 22924SF

FIXING EXAMPLES

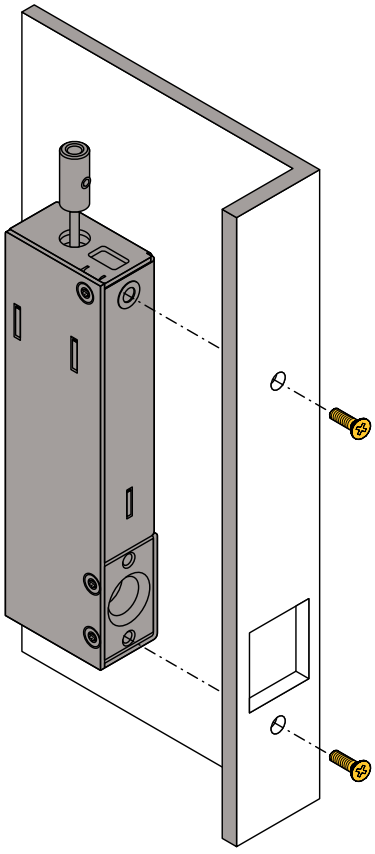

Art. 22922S - 22924S
Attachment on the inner side of the profile

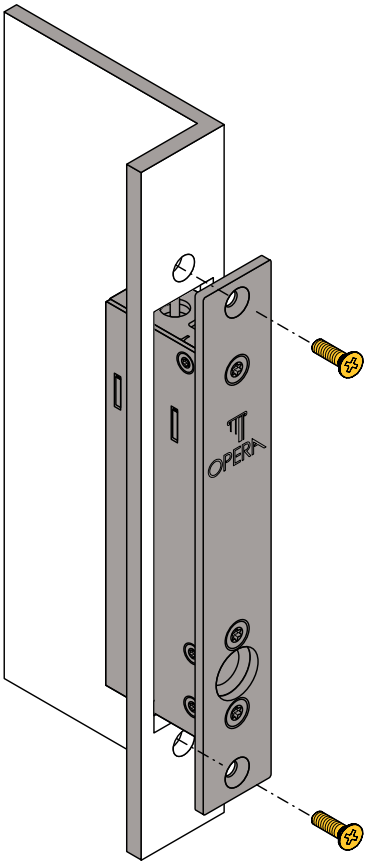

Art. 22922SF - 22924SF
Attachment on the profile

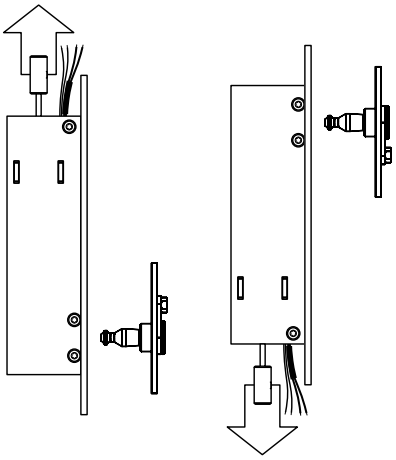

INSTALLATION DIRECTION
The lock can be mounted with the unlocking lever facing upward or downward

Common characteristics: Stainless steel body. Nickeled tempered steel block pin on stainless steel counterplate. Strength of resistance to breaking and entering: 800 kg. Insertion of the front panel block pin.
Use: safety closure, electrically controllable for the closuring of sliding doors, including external ones exposed to weather.

Art.	Description	€
	SECURITY ELECTRIC LOCK FOR SLIDING DOORS Mechanical opening with European cylinder. Locked without power supply Stainless steel front plate. Stainless steel counterplate Counterlock with pin release system when the door is ajar Pin diameter 9.5 mm, extension 25 mm Power supply: 12 or 24 Vdc Current absorbed: 1,000 mA at 12 V / 500 mA at 24 V Opening: limited to the duration of the impulse with current limiter Entrance: 28 mm C. / N.A. / N.C. microswitch of inserted pin position	
23822	Power supply: 12Vdc	**348,60**
23824	Power supply: 24Vdc	**348,60**
23822FG	Power supply: 12Vdc - with hold open function	**373,50**
23824FG	Power supply: 24Vdc - with hold open function	**373,50**
	MECHANICAL VERSION	
23800	With Euro-profile cylinder facilities	**249,00**
23800FG	With Euro-profile cylinder facilities and hold open function	**273,90**
Art. + CF	Fix counterplate - spare part (ex. 23822CF)	**-23,10**
Art. + CFL	Fix counterplate long front plate- spare part (ex. 23822CFL)	**-20,00**
02238CF	Fix counterplate with short front plate mm 70 x 25 x 3 - spare part	**49,80**
02238CFL	Fix counterplate with long front plate mm 150 x 25 x 3 - spare par	**52,70**
02238	Counter lock - spare part	**118,60**

02308

02308CF

CARTER FOR SURFACE FITTING
ARCA KEY AND ARCA SLIDE
Lock and armature plate carter body in Stainless Steel
Euro-profile cylinder facilities
Backset: 28mm

02308.1	With standard counterplate - Right hand	**80,60**
02308.2	With standard counterplate - Left hand	**80,60**
02308.1CF	With fix counterplate - Right hand	**80,60**
02308.2CF	With fix counterplate - Left hand	**80,60**

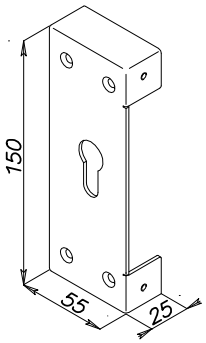

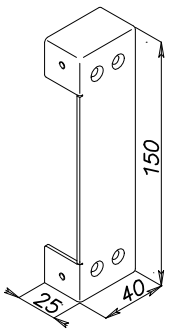

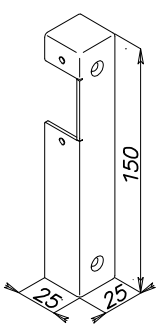

Carter handing Right

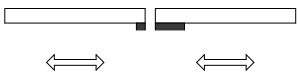

Carter handing Left

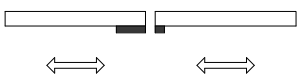

Common features: Stainless steel body. Nickel plated hardened steel block pin on stainless steel counterplate Strength of resistance to breaking and entering: 800 kg. Insertion of the front panel block pin.
Use: security locking, electrically controllable for the closuring of sliding doors, including external ones exposed to weather.

Art.	Description	€
	SECURITY ELECTRIC LOCK Mechanical opening with European cylinder Locked without power supply Front panel lock and stainless steel counterplate Counterplate with pin release system when the door is ajar Pin diameter 9.5 mm, extension 25 mm. Opening: limited to the duration of the impulse with current limiter. Entrance: 20 mm. C. / N.A. / N.C. microswitch of inserted pin position	
	FAIL SAFE	
23622S	Power supply : 12Vdc - 1A	**373,50**
23624S	Power supply : 24Vdc - 500mA	**373,50**
	FAIL SECURE	
23822S	Power supply : 12Vdc - 1A	**348,60**
23824S	Power supply : 24Vdc - 500mA	**348,60**
	MECHANICAL VERSION	
23800S	With Euro-profile cylinder facilities	**231,00**
Art. + CF	Supplied with fix counterplate	**-23,10**
Art. + CFL	Supplied with fix counterplate long front plate	**-20,00**
02238CF	Fix counterplate - spare part	**49,80**
02238CFL	Fix counterplate, long front plate - spare part	**53,70**
02238	Counter lock - spare part	**118,60**

02308

02308CF

CARTER FOR SURFACE FITTING
ARCA KEY AND ARCA SLIDE
Lock and armature plate carter body in Stainless Steel
Euro-profile cylinder facilities
Backset: 20mm

02308.1S	with standard counterplate - Right hand	**80,60**
02308.2S	with standard counterplate - Left hand	**80,60**
02308.1CFS	with fix counterplate - Right hand	**80,60**
02308.2CFS	with fix counterplate - Left hand	**80,60**

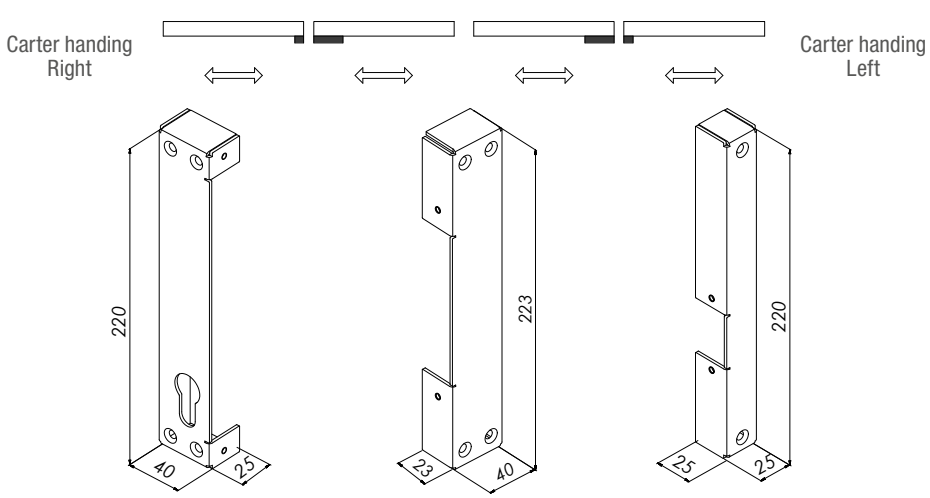

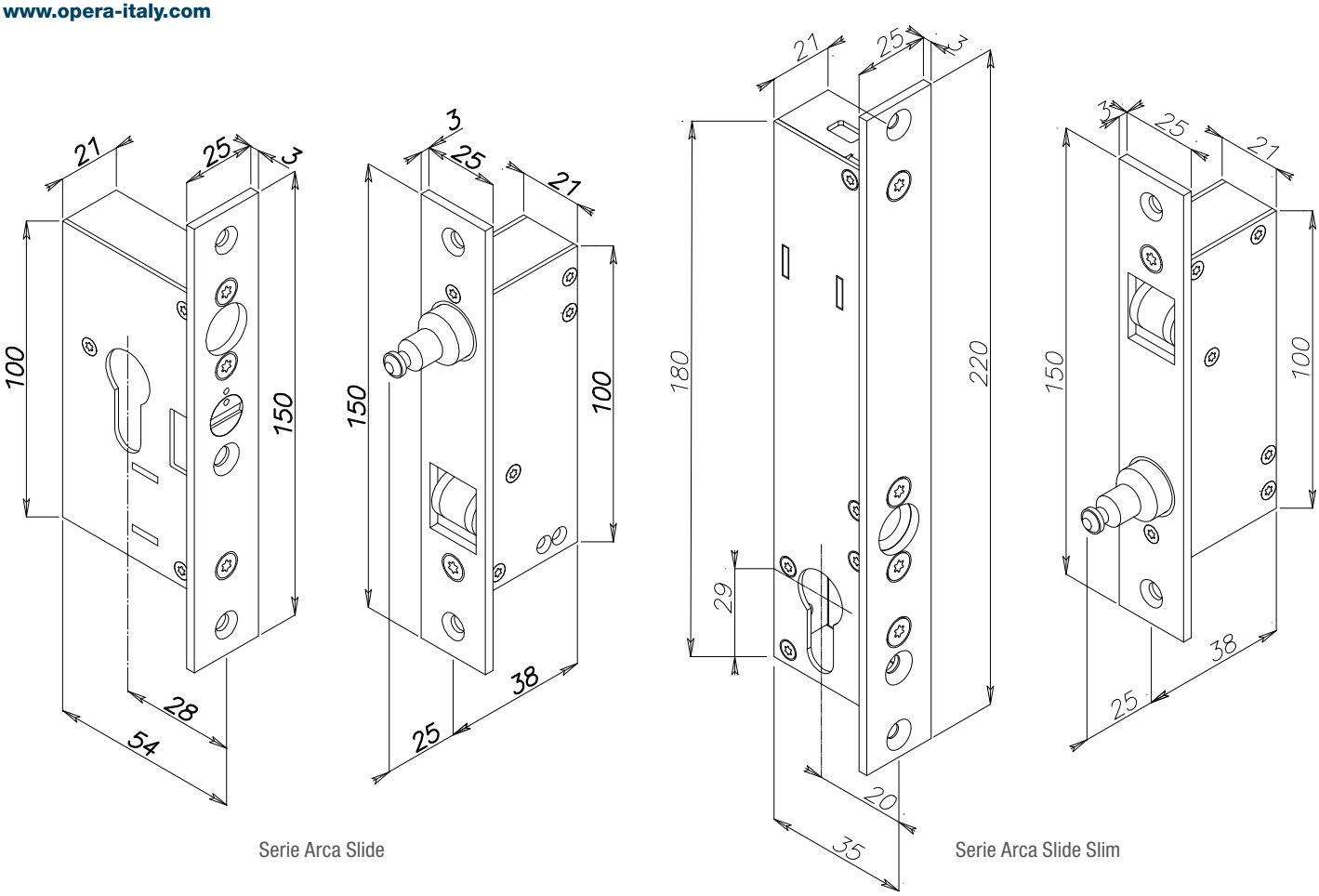

Serie Arca Slide

Serie Arca Slide Slim

COUNTERLOCK SYSTEM

When the door is closed

When the door is open

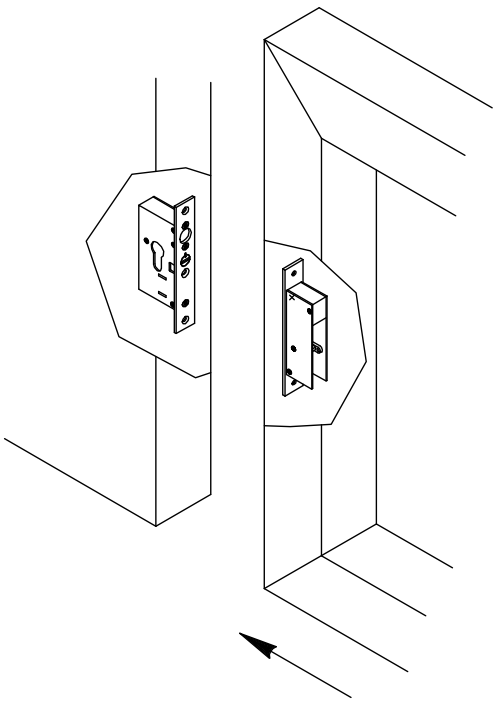

SEE
APPLICATION EXAMPLE

1 SHUTTER SLIDING DOOR

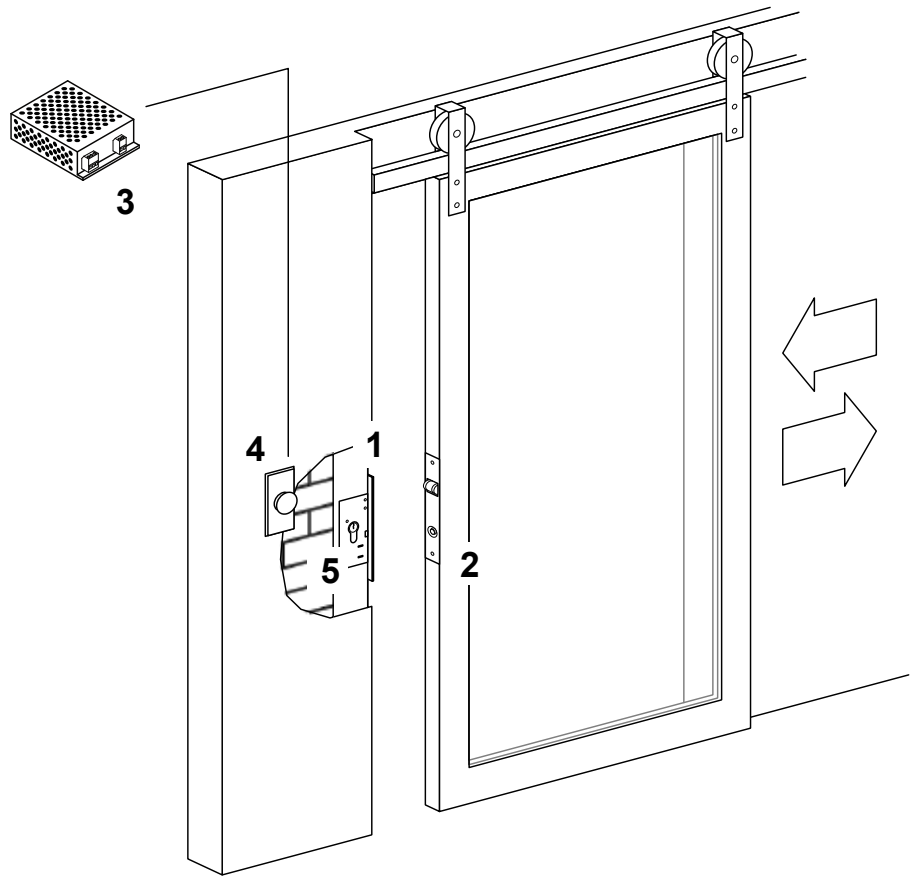

LEGENDA

1 Arca Slide
2 Striking plate
3 Power supply
4 Tappet contacts
5 European cylinder
6 Button

2 SHUTTERS SLIDING DOORS

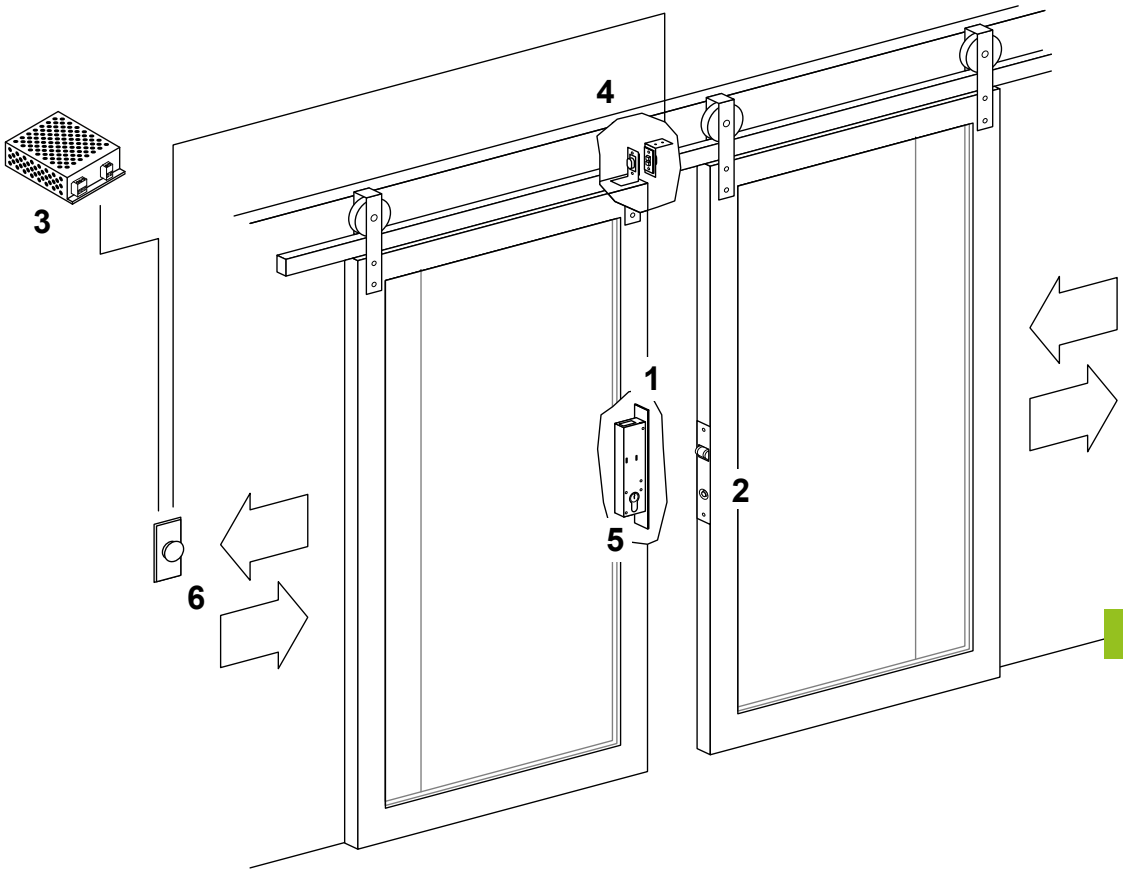

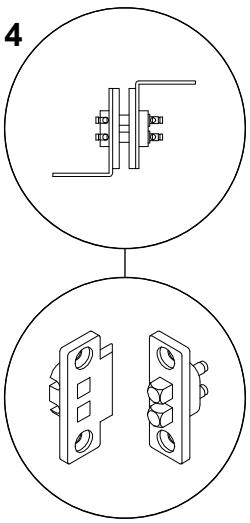

LEGENDA

1 Arca Slide
2 Striking plate
3 Power supply
4 Tappet contacts
5 European cylinder
6 Button

Art.	Description	€
23000	**ELECTROMECHANICAL LOCK FOR DOUBLE ACTION DOORS** Mechanical opening with European type cylinder Front plate and strike plate in stainless steel Reversible latch with mechanical block in closed position Striking plate device to block the latch in the closed position Latch dimensions (mm): 26 x 15.5 x extension 13 Operating voltage: 12/24 Vac/dc Absorbed current: 280 mA at 12 Vdc - 140 mA at 24 Vdc Version: fail unlocked (closed with power) and fail locked (open with power) selectable Backset (mm): 30 Latch blocked/released status contact C. / N.O. / N.C. Supplied with 2 striking plates - 1 for regular swing door, 1 for double swing action door **Use:** electromechanical lock ideal for operation on double action doors (opening in both directions). The door is reclosed automatically when it approaches by pressing on the special mechanical alignment device. **On request:** as the opening of the electromechanical lock is limited to the duration of the electric pulse (security version) or the lack of power (fail unlocked version), we recommend using the timer board item 51500 (pag. 43) to time release the lock (usable only if the electromechanical lock is powered with 12 Vdc). If powered with 24 Vdc, other time release devices available on the market and not provided by us must be used.	294,00
	STRIKING PLATE - REPLACEMENT	
02300	Striking plate mm 150 x 68 x 1,5 for double action doors	20,20
02301	Striking plate mm 150 x 49 x 1,5 for normal swing doors	26,10

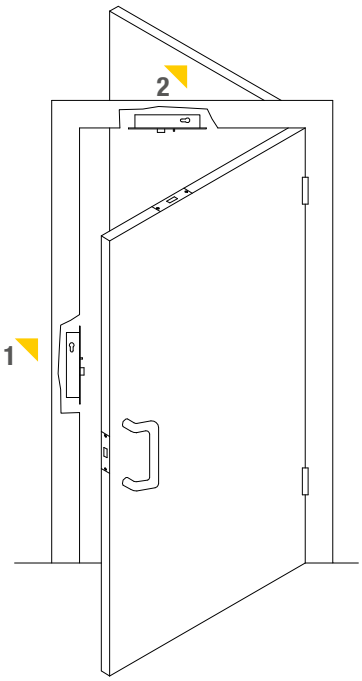

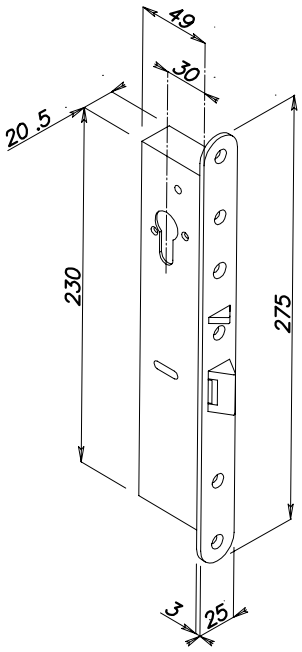

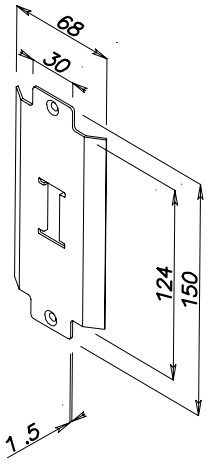

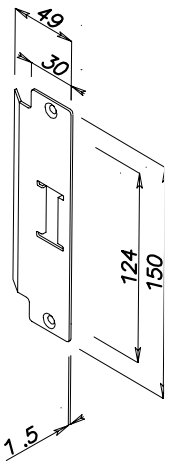

APPLICATION EXAMPLE

1 Mounting on vertical frame
2 Mounting on horizontal frame

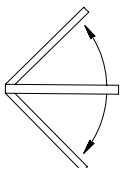

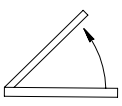

Art.	Description	€
54610A	**ELECTRONIC CONTROL UNIT** **For one door** ABS box in white color RAL9002 designed for wall mounting, inside an electrical box, or on DIN35 rail using the mounting kit included in the package. Dimensions: 102 x 50 x 27.5 mm Power supply: 10-30 Vdc / 12-18 Vac Current consumption: 60 mA in standby Microprocessor-based control electronics Preparation for interlocking connection between 2 or more doors Inputs with N.O. (Normally Open) contacts for: - Opening - Locking - Emergency - Reset Alarms - Latch position - Door position - Interlock Outputs: - 1 Power relay, configurable N.O./N.C. contact - 30 Vac/Vac, 5 A max with resistive load - Status relay C./N.O./N.C. - 30 Vdc/Vac, 1 A max with resistive load for connection to Red/Green traffic lights - Alarm relay C./N.O. contact, configurable N.O./N.C. - 30 Vdc/Vac, 1 A max with resistive load for Extended door opening, Fault, Emergency, Simultaneous opening of 2 or more doors if connected in interlock Possibility of cascading connection to interlock multiple doors with each other (to be connected for each door to be controlled). Button for monitoring and ad justing times for: - Closing from 0 - 5 sec. upon door closure - Closing from 0 - 240 sec. if the door is not opened - Extended door opening alarm from 0 - 240 sec.	260,00

INTERLOCKING BETWEEN TWO OR MORE DOORS

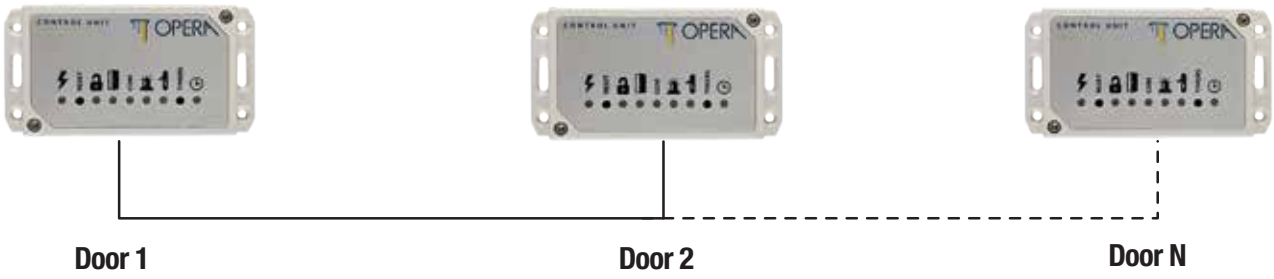

Art.	Description	€

54611A

54612A

54613A

54614A

UNIVERSAL COMMAND CONSOLE CONTROL SYSTEM

Aluminium console box in black
with silk screened polycarbonate panel
Membrane button with touch effect
Dimensions (mm): 195 x 160 x 50 (1 and 2 door versions)
Dimensions (mm): 300 x 160 x 50 (3 and 4 door versions)
Operating voltage: 12/24 Vac/Vdc
Connections via screw terminal block
N.O. inputs for command of door Opening from console
N.O. inputs for command of door Opening from external push buttons or sensitive handles
N.O. input for Reset command
N.O. input for Block command
N.O. / + 12 Vdc Input for alarm activation
N.O./N.C. input with memory for management of the interlock with insertion of a Metal-Detector *
N.O./N.C. input for presence of persons inside the interlock for automatic operation *
ON/OFF key switch for turning off system via external relay (i.e. item REL12V)
Manual, Automatic, Emergency key switch
Automatic operation selectable in 4 modes:
mono-directional, bi-directional, first door open, from external push button / sensitive handle on the doors*

Optical signalling:
Red/Green LED for Open/Closed lock status indication
Red/Green LED for Open/Closed door status indication
Alarm, Reset, Presence of Persons, Automatic, Emergency, Block, Metal-Detector, Power / Low Battery Alarm LEDs
Internal buzzer (can be deactivated) for acoustic signalling of pressing of push buttons, for signalling of an active alarm and low battery
* Functions enabled in 2 - 3 and 4 door consoles for interlocking operation

54611A	For 1 door	**430,40**
54612A	For 2 doors	**465,90**
54613A	For 3 doors	**897,50**
54614A	For 4 doors	**930,70**

Use: universal console for door command

Connectable to Prima series Solenoid bolts, 54610A electronics, Safety series magnetic locking systems, Omnia 1000 series electric strikes, Quadra series Solenoid bolt and Quadra Micro series.

SERVICE RELAY

REL12V	Relay with polarized activation coil at 12 Vdc/90 mA Double switching C./N.O./N.C. - Contacts rating 10 A @ 250 Vac	**42,70**
REL24V	Relay with polarized activation coil at 24 Vdc / 50 mA Double switching C./N.O./N.C. - Contacts rating 10 A @ 250 Vac	**42,70**

Use: can be used as relay for turning on and off the system via ON/OFF key switch on the console (or for other uses where required)

CONTROL SYSTEM

Art.	Description	€
54614B	**DESKTOP CONSOLE - CONTROL SYSTEM SELECTABLE FOR 1-2-3-4 DOORS** White ABS control box with capacitive control penel screen-printed on polycarbonate secret light technology. Capecitive touch buttons Dimensions: 175 x 140 x 52 mm (1, 2, 3, and 4-door versions) Power supply: 12 Vdc / 2A. Plug-in power supply 230V / 12 Vdc - 2A (included in the package) RS-485 serial connections via RJ45 connector. ON/OFF button for turning off the console. Key switch for emergency management. Selectable Automatic/Manual function in 4 modes (internal dip-switch setting): Unidirectional, bidirectional, first door open, from external touch buttons/ handles on the doors* (functions enabled in 2, 3, and 4-door consoles for interlock operation). Optical indicators (icons): White illuminated button for Auto/Normal mode (illuminated white text enabled). White/red illuminated button for Lock mode. White illuminated button for Reset mode. White, green, and red illuminated buttons for opening doors 1, 2, 3, and 4. Red/Green icons for indicating lock status (Open/Closed). Red/Green icons for indicating door status (Open/Closed). Icons for Alarm, Reset, Person Presence, Automatic, Emergency, Lock, Metal Detector, External Call, Power/Battery Low. Internal (disengageable) buzzer for audible signaling of button press, active alarm, and low battery. **Use:** connectable, on a serial line through interface circuits, to solenoid bolts of the Prima and Classica series, electronic devices 54610A, matched with the locking systems of the Sefety, Omnie1.000, Quadra, Quadra Micro series, to the electronic devices art. 54250 and 54255, matched with the motorized electromechanical locks of the Maxima series art. 25500	470,00

Setup for 1 door

Setup for 2 door

Setup for 3 doors

Setup for 4 door

	Art.	Description	€
	54615B	**AUXILIARY CIRCUIT FOR PERIPHERAL MANAGEMENT** Dimensions: for ABS box on DIN rail Power supply: 12 - 24 Vdc (non-polarized) 500mA max 12 - 18 Vac 5VA max Inputs: - No. 2 normally open (N.O.) contacts for opening - No. 2 normally open (N.O.) contacts for external intercom call - No. 1 normally open (N.O.) contact for presence sensor - No. 1 normally open (N.O.) contact for metal detector - No. 1 normally open (N.O.) contact for battery monitor for battery backup management (with optional circuit) Signal terminals: - No. 1 x RS-485 Internal button and dip switch for configuration management, LED indicators for functionality and network activity. **Use:** Circuit that expands the functionalities of the console system via serial connection for the management of peripherals (metal detector , external call, auxiliary openings, presence sensor, and battery backup management).	140,00
	54616B	**MASTER OPNET CIRCUIT FOR SERIAL COMMUNICATION MANAGEMENT** Dimensions: ABS box on DIN rail Power supply: 12 - 24 Vdc (non-polarized) 500mA max 12 - 18 Vac 5VA max Signal terminals: 2 x RS-485 GPIO Interfacing: internal button for configuration management, internal dip switch for configurations, LED indicators for functionality and network activity. **Use:** Circuit for managing the communication of all wired peripherals via serial connection.	148,00
	54617B	**BATTERY BACK-UP** Dimensions: ABS box in DIN rail Power supply: 12 -18 Vac / 15 - 24 Vdc - Current 5A max Maximum absorbed power 75 W Regulated output voltage 13 Vdc **Use:** Circuit that allows the management of the presence and the charge / discharge status of the backup battery	108,00

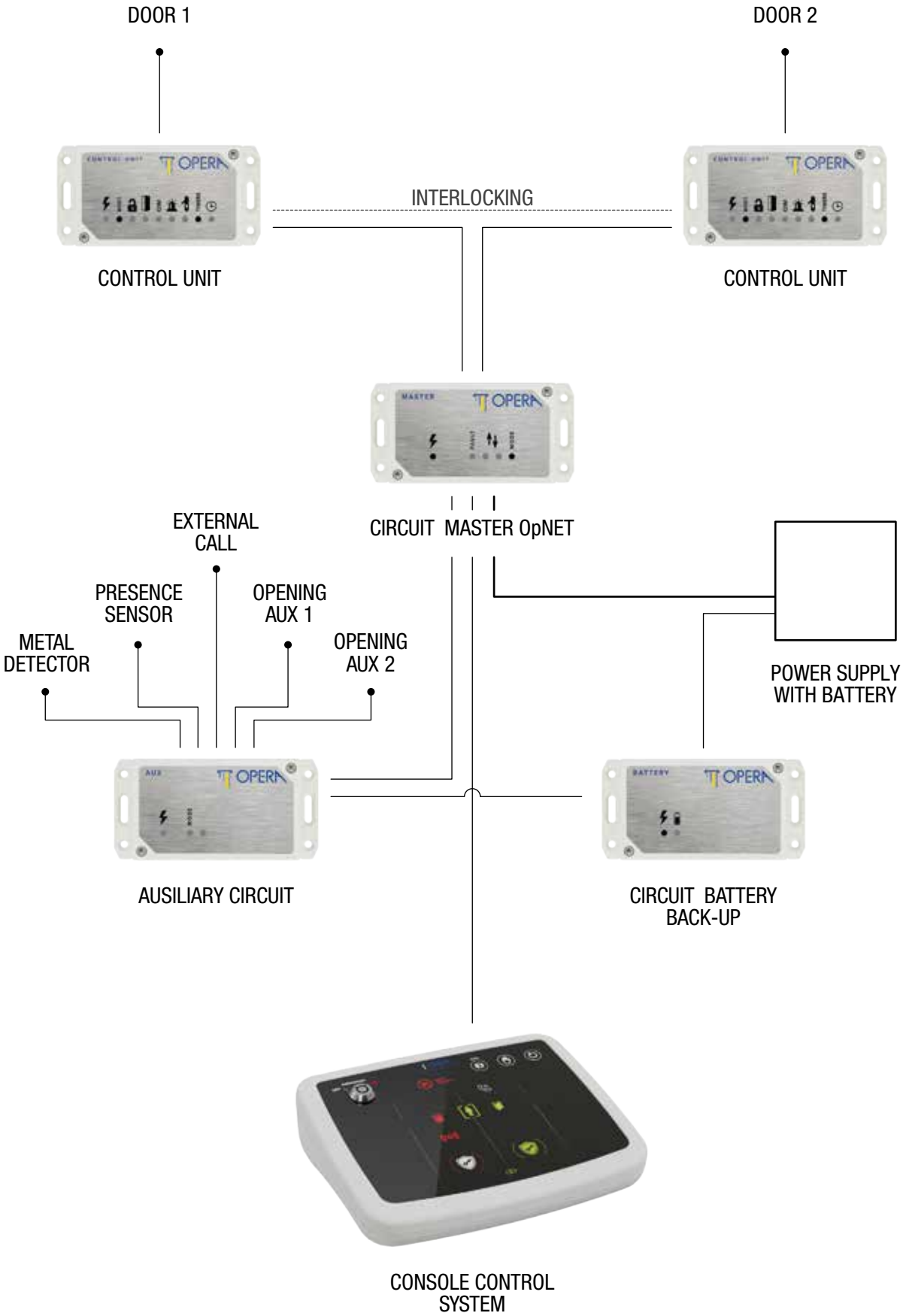
DOOR 1
DOOR 2
INTERLOCKING
CONTROL UNIT
CONTROL UNIT
EXTERNAL CALL
PRESENCE SENSOR
OPENING AUX 1
METAL DETECTOR
OPENING AUX 2
CIRCUIT MASTER OpNET
POWER SUPPLY WITH BATTERY
AUSILIARY CIRCUIT
CIRCUIT BATTERY BACK-UP
CONSOLE CONTROL SYSTEM

SECURITY SYSTEM WITH ELECTRIC STRIKE OMNIA 1.000

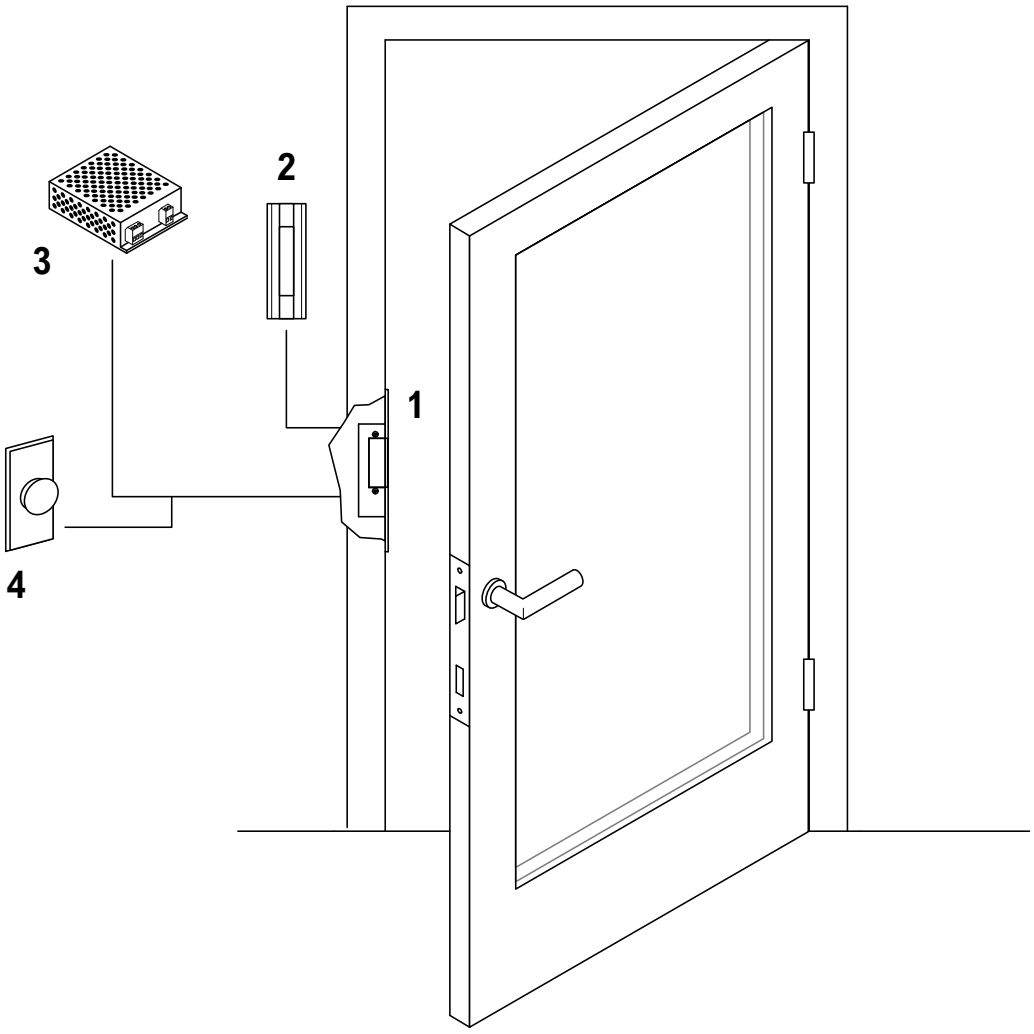

LEGENDA

1 Security electric strike
2 Indicator lamp
3 Power supply
4 Remote opening button

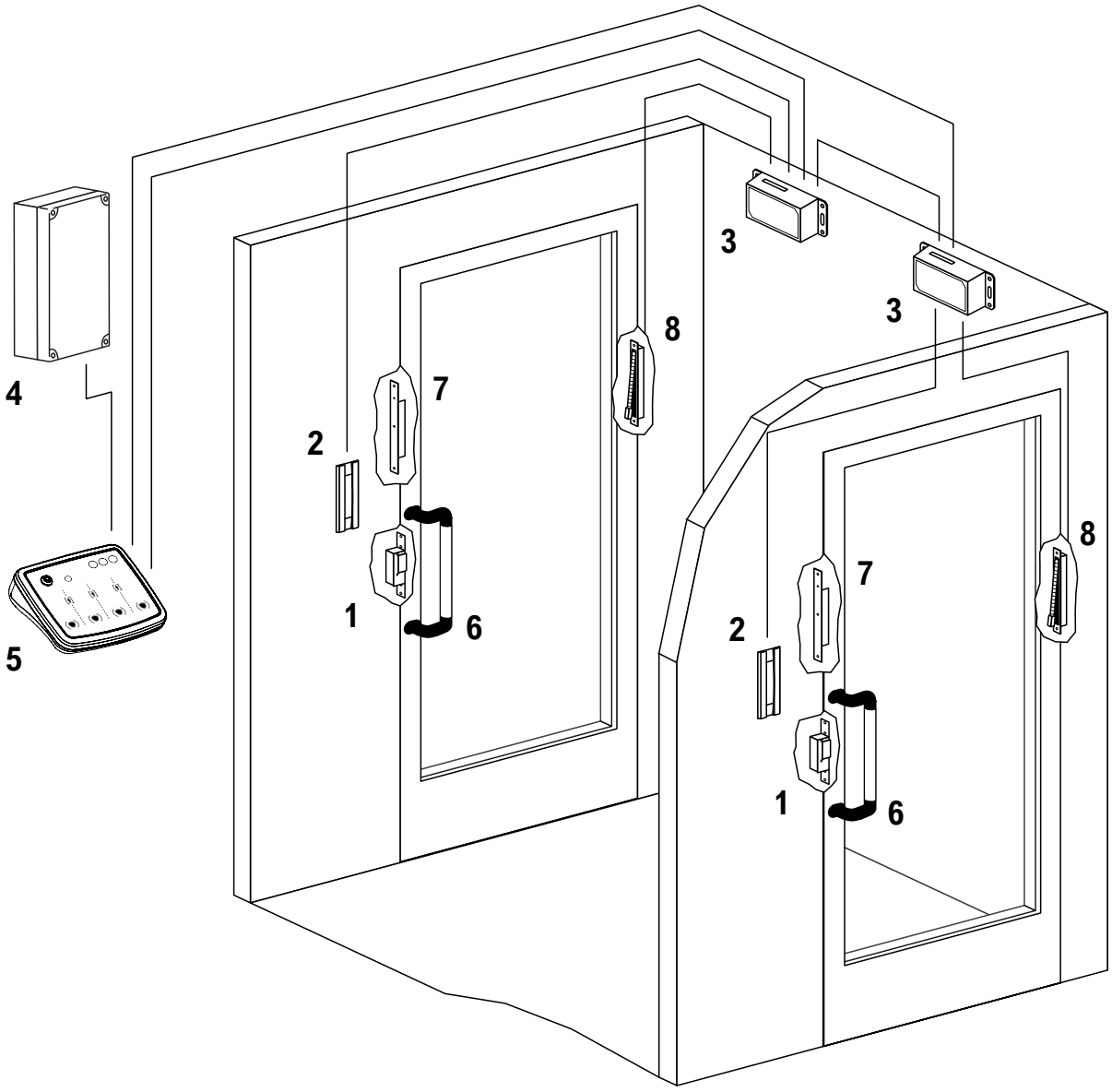

LEGENDA

1 Electric Strikes
2 Indicator lamps
3 Control units
4 Power supply
5 Desktop console
6 Sensitive bars
7 Sensitive cards
8 Lead covers

PRIMA

- SECURITY SOLENOID LOCKS
- ANTI CUTTING AND ANTI BREAKING AND ENTERING REVOLVING BOLT
- MANUAL ACTIVATION WITH EUROPEAN CYLINDER AND HANDLE
- FOR AN INTENSIVE AND CONTINOUS USE
- IDEAL FOR STEEL OR ALUMINIUM DOORS
- SINGLE OR INTERLOCKED CONFIGURATION

OPERA

PRIMA

www.opera-italy.com

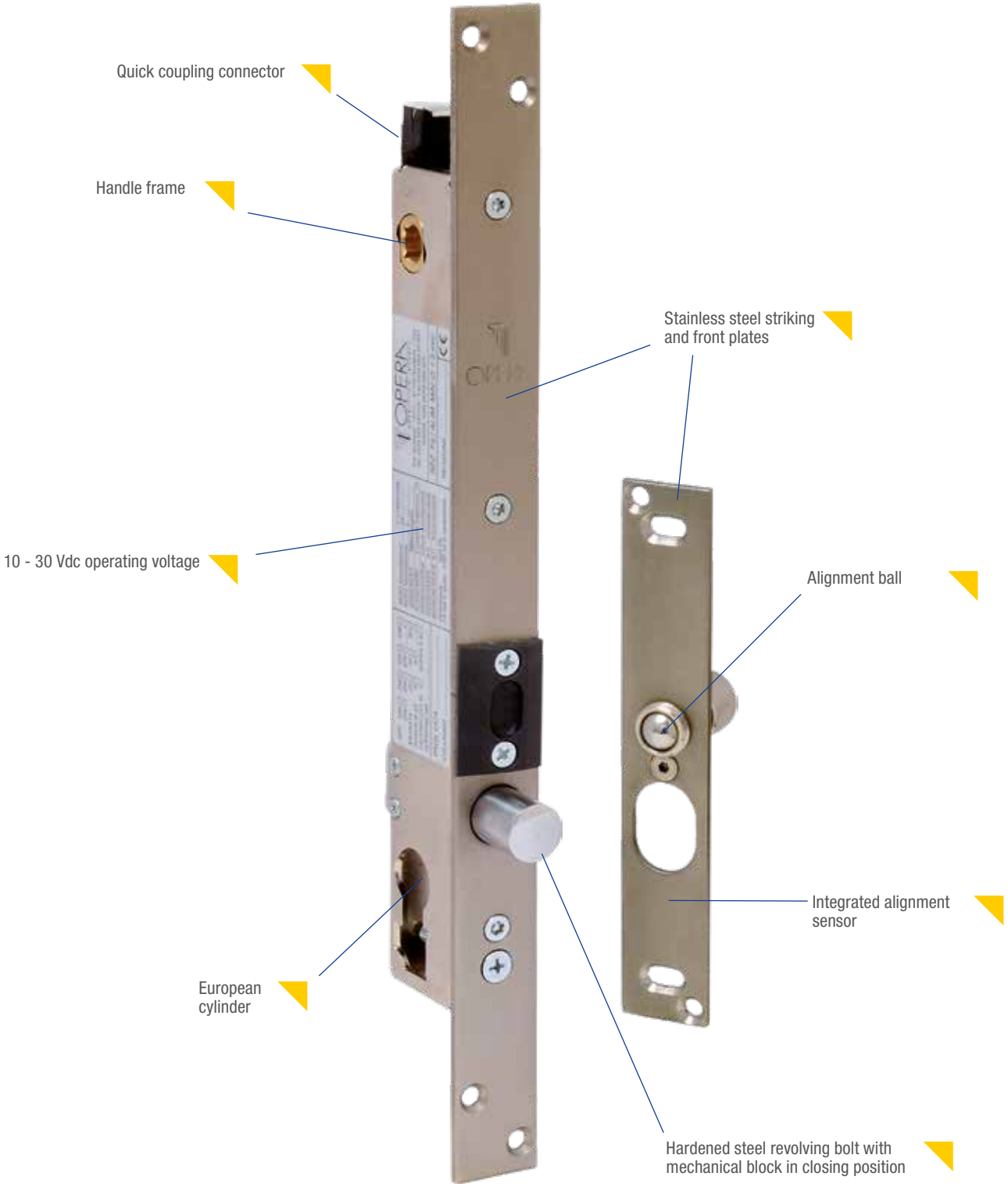

PLUS

- Security solenoid lock
- Hardened steel revolving bolt with mechanical block
- Fail safe or fail secure versions without power
- Internal microprocessor control electronics
- High resistance to breaking and entering
- Mechanical opening with European cylinder or handle
- Automatic closing with adjustable timing

SINGLE DOOR WITH SOLENOID LOCK

INTERNAL OPENING

EXTERNAL OPENING

PLUS EXAMPLE

- Solenoid lock to be mounted on emergency exits
- To be mounted on the frame or on the shutter
- Single door operating system (condominiums, offices, companies)
- Interlocked doors operating system (banks, jewelries, corporations)
- To be matched with intercom and access control systems

24600

24600SA

24800

24800SA

Art.	Description	€
	SOLENOID BOLT FOR INTERLOCKING SYSTEMS Mechanical opening with European type cylinder **(cylinder with internal knob not usable)** Striking plate in stainless steel (mm) 320 x 25 x 3 Armature plate in stainless steel (mm) 150 x 25 x 3 with alignment magnet Revolving bolt in anti-cutting hardened steel with mechanical block in closed position Deadbolt dimension (mm): extension 20 (25 in the XL version), diameter 16 Lock body dimensions on page 140 Operating voltage: from 10 to 30 Vdc Absorbed current: 2.5/3 A peak 130/230 mA for maintenance with electronic control Internal microprocessor control electronics Rapid plug-in connector Ready for interlocking connection of 2 or more doors N.O. Opening, Block, Emergency and Alarm Reset Controls Deadbolt position contact C. / N.O. / N.C Door position contact N.O. for the Open / Closed monitoring function or for use on an external door alignment sensor Open Collector Alarm contact for Prolonged Opening from 0 to 120 seconds, Fault, Emergency, simultaneous Opening of 2 or more doors if in interlocked configuration Opto-electronic bolt position control Magnetic door position sensor Push buttons for monitoring and adjustment of relocking times from 0-5 seconds upon approach of the door and from 0-60 seconds if the door is not opened The timings can be disabled for use of the solenoid bolt with external control electronics Push button for monitoring and adjustment of the Prolonged Door Open Alarm trigger (function can be disabled) Vertical mounting (Horizontal mounting on demand see page 163)	
	Fail unlocked deadbolt open without power	
24600	Without handle frame	**595,10**
24608	With handle frame (mm) 8	**670,30**
	Fail locked deadbolt closed without power	
24800	Without handle frame	**595,10**
24808	With handle frame (mm) 8	**670,30**
	Backsets available (mm): 25 - 30 - 35 - 60 **Options On request:**	
Art. + XL	Extended deadbolt + 5 mm.	**+ 35,90**
Art. + SA	Solenoid bolt with anti-rebound ball-catch mounted directly on the Armature plate with the slide in ABS on the striking plate	**+ 45,60**
Art. + CS	Solenoid bolt for pin key inserted (available backsets 27, 32 and 37)	**+ 47,90**
Art. + PK	Solenoid bolt prepared to accept the swiss round cylinder 22mm diam. Only available in backset 35mm - supplied without cylinder	**+ 71,80**
	Extra Entrata: for backset 60 mm	**+ 71,80**
	Packaging: solenoid bolt, armature plate, cylinder screw and connector	

Art.	Description

KIT FOR INTERLOCKING SYSTEM EXAMPLE 1

Features: Management of the doors with manual opening by means of console push buttons
Kit is made up of:
2 Solenoid bolts series 24600 or 24800 (specify backset)
1 Power supply item 05320A or 05312A (in box with space for battery)
1 Command console item 54612A
2 Concealed cable covers (with lock mounted on the door) item 08600
1 Backup battery item 00712

KIT FOR INTERLOCKING SYSTEM EXAMPLE 2

Features: Management of the doors with manual opening by means of console push buttons
Indicator lamp signalling to be inserted on the door post to support management of opening to the public.
Kit is made up of:
2 Solenoid bolts series 24600 or 24800 (specify backset)
1 Power supply item 05320A or 05312A (in box with space for battery)
1 Command console item 54612A
4 Indicator lamps item 55010 (Silver or Black) or 55030
2 Concealed cable covers (with lock mounted on the door) item 08600
1 Backup battery item 00712

KIT FOR INTERLOCKING SYSTEM EXAMPLE 3

Features: Management of the doors with manual opening by means of console push buttons
Indicator lamp signalling to be inserted on the door post to support management of opening and intercom for communication with the public outside.
Kit is made up of:
2 Solenoid bolts series 24600 or 24800 (specify backset)
1 Power supply item 05320A or 05312A (in box with space for battery)
1 Command console item 54612A
3 Indicator lamps item 55010 (Silver or Black) or 55030
1 Indicator lamp item 55012 (Silver or Black) or 55030 + 55033
1 Intercom handset item 05513
2 Concealed cable covers (with lock mounted on the door) item 08600
1 Backup battery item 00712

KIT FOR INTERLOCKING SYSTEM EXAMPLE 4

Features: Management of the doors with manual opening by means of console push buttons and automatic opening by means of external push buttons on the indicator lamps.
Indicator lamp signalling to be inserted on the door post to support management of opening and intercom for communication with the public outside.
Kit is made up of:
2 Solenoid bolts series 24600 or 24800 (specify backset)
1 Power supply item 05320A or 05312A (in box with space for battery)
1 Command console item 54612A
3 Indicator lamps with push buttons item 55011 (Silver or Black) or 55031
1 Indicator lamp item 55014 (Silver or Black) or 55031 + 55033
1 Intercom handset item 05513
2 Concealed cable covers (with lock mounted on the door) item 08600
1 Backup battery item 00712

25600

25600SA

25800

Art.	Description	€
	SOLENOID BOLT FOR SINGLE DOOR Mechanical opening with European type cylinder **(cylinder with internal knob not usable)** Striking plate in stainless steel (mm) 320 x 25 x 3 Armature plate in stainless steel (mm) 150 x 25 x 3 with alignment magnet Revolving bolt in anti-cutting hardened steel with mechanical block in closed position Deadbolt dimension (mm): extension 20 (25 in the XL version), diameter 16 Lock body dimensions on page 140 Operating voltage: From 10 to 30 Vdc Absorbed current: 2.5/3 A peak - 130/230 mA for maintenance with electronic control Internal microprocessor control electronics Rapid plug-in connector Ready for interlocking connection of 2 or more doors N.O. Opening control Deadbolt position contact C. / N.O. / N.C Opto-electronic bolt position control Magnetic door position sensor Push buttons for monitoring and adjustment of relocking times from 0-5 seconds upon approach of the door and from 0-60 seconds if the door is not opened The timings can be disabled for use of the solenoid bolt with external control electronics Vertical mounting (horizontal on demand see page 163)	
	Fail unlocked deadbolt open without power:	
25600	Without handle frame	**464,00**
25608	With handle frame (mm) 8	**548,30**
	Fail locked deadbolt closed without power:	
25800	Without handle frame	**464,00**
25808	With handle frame (mm) 8	**548,30**
	Backsets available (mm): 25 - 30 - 35 - 60 **Options On request:**	
Art. + XL	Extended deadbolt + 5 mm.	**+ 35,90**
Art. + SA	Solenoid bolt with anti-rebound ball-catch mounted directly on the Armature plate with the slide in ABS on the striking plate	**+ 45,60**
Art. + CS	Solenoid bolt for pin key inserted (available backsets 27, 32 and 37)	**+ 47,90**
Art. + PK	Solenoid bolt prepared to accept the Swiss round cylinder 22mm diam. Only available in backset 35mm -	**+ 71,80**
	Extra charge for backset mm 60	**+ 71,80**
	Packaging: solenoid bolt, armature plate, cylinder screw and connector	

Versione 25808 60

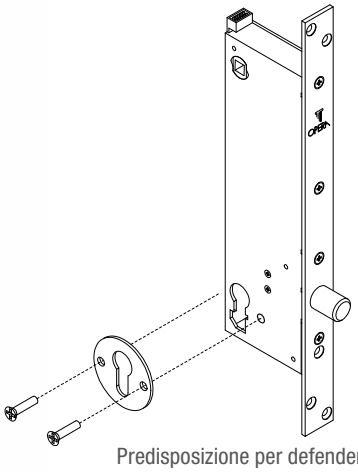

Predisposizione per defender

Art.	Description	€
	ELECTRIC SAFETY BOLT FOR SINGLE DOOR **Technical specifications:** see page 158.	
	Electric bolts compatible with Corni type series 57036/38	
OP57036	With handle plate - Bolt open in the absence of power	**612,20**
OP57038	With handle plate - Bolt closed in the absence of power	**612,20**
	Electric bolts for replacing electric locks on the door frame	
25600FL	Bolt open in the absence of power - Without handle plate	**475,40**
25608FL	Bolt open in the absence of power - With handle plate mm 8	**559,70**
25800FL	Bolt closed in the absence of power - Without handle plate	**475,40**
25808FL	Bolt closed in the absence of power - With handle plate mm 8	**559,70**
	Available sizes: mm 25 - 30 - 35 - 60	
	Available on request:	
Art. + XL	Extended bolt length + 5 mm	**+ 35,90**
Art. + SA	Electric bolt with anti-rebound alignment ball mounted directly on the strike plate with ABS slide on the front	**+ 45,60**
Art. + CS	Electric bolt with key pin cylinder inserted (available sizes mm 27, 32, and 37)	**+ 47,90**
	Extra Size: mm 60	**+ 71,80**
	Package: electric bolt, strike plate, connector, and cylinder screw	

BACKSET	X	Y
25	22	35
30	27	40
35	32	45
60	57	70

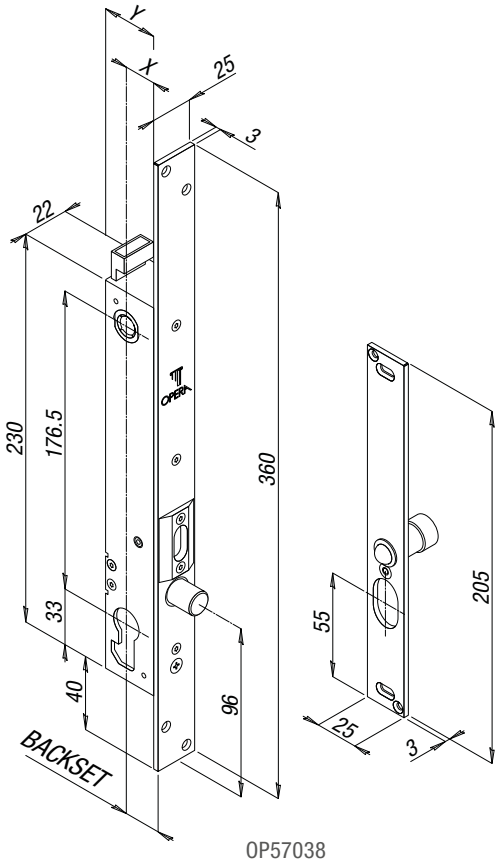

OP57038

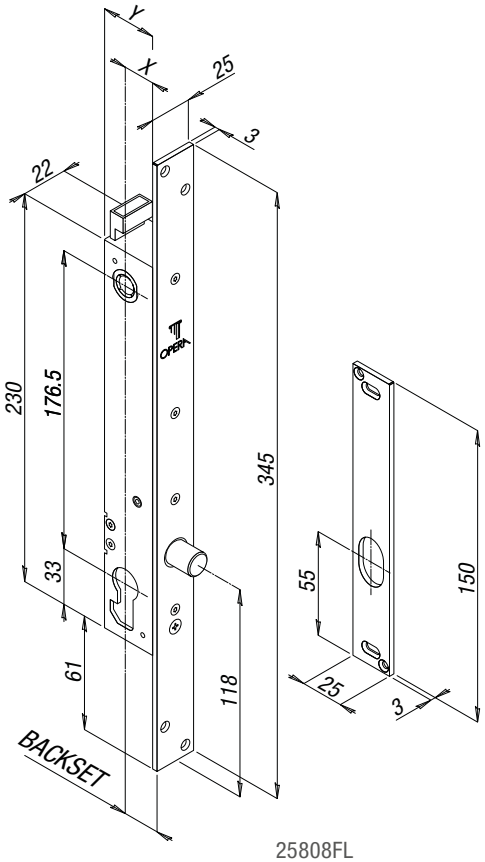

25808FL

25908

25908SA

Art.	Description	€
	ELECTRIC BOLT FOR SINGLE DOOR Mechanical opening with European cylinder **(internal knob cylinder not usable)** Stainless steel front mm 320 x 25 x 3 Stainless steel strike plate mm 150 x 25 x 3 Reversible tempered steel anti-cut latch Lock body dimensions on page 163 Latch dimensions: mm 16 diameter x 14 x 16 extension Power supply: from 10 to 30 Vdc Current Draw: 2.5/3 A peak - 130/230 mA holding with permanent electronic control Internal microprocessor control electronics Connection via quick-connect connector Normally Open (N.O.) Opening command Normally Closed (N.C.) latch position contact Opto-electronic control of latch position Button for monitoring and adjusting the latch exit time from 0-60 sec. Timing can be disabled for use with external management electronics	
	Latch closed in the absence of power:	
25900	Without handle plate	**464,00**
25908	With handle plate mm 8	**548,30**
	Available sizes: 25 - 30 - 35 - 60 (extra cost) **Note: In the 60mm size version, specify the hand .1 (right) - .2 (left)** Example: 2590060.1	
Art. + C	**Shabbat-certified version available on request**	**+11,40**
Art. + SA	Electric bolt with anti-rebound alignment ball mounted directly on the strike plate with ABS slide on the front	**+ 45,60**
Art. + CS	Electric bolt with key pin cylinder inserted (available sizes mm 27, 32, and 37)	**+ 47,90**
Art. + PK	Electric bolt for Swiss cylinder diam. 22 (available size mm 35) Specify right or left hand	**+ 71,80**
	Extra Size: mm 60	**+ 71,80**
	Package: electric bolt, strike plate, connector, and cylinder screw	

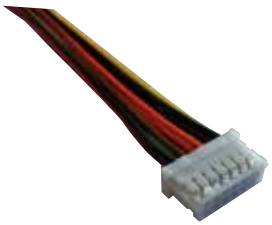

	SPARE CONNECTORS	
CC090	9-wire spare connector for series: 256 - 258 - 259 - 278 - 279 - OP series	**14,90**
CC091	14-wire spare connector for series 246 - 248 - 268	**19,90**

25910

25910SA

Art.	Description	€
	SOLENOID BOLT FOR SINGLE DOOR - FAIL SAFE Mechanical opening with European type cylinder (cylinder with internal knob not usable) Striking plate in stainless steel (mm) 320 x 25 x 3 Armature plate in stainless steel (mm) 150 x 25 x 3 Reversible anti-cutting latch in hardened steel Lock body dimensions - see below Latch dimensions (mm): 16 (diameter) x 14 x 16 extension Operating voltage: from 10 to 30 Vdc Absorbed current: 2.5/3 A peak - 130/230 mA for permanent maintenance with electronic controll Internal microprocessor control electronics N.O. Opening control Opto-electronic Monitored latch position control Relocking after 5 seconds	
	Fail unlocked latch closed with power:	
25910	Without handle frame	**490,20**
25918	With handle frame (mm) 8	**574,60**
	Backsets available (mm): 25 - 30 - 35 -60	
Art. + C	**Versione con certificazione Shabbat su richiesta**	**+ 11,40**
Art. + SA	Solenoid bolt with anti-rebound ball-catch mounted directly on the armature plate with the slide in ABS on the striking plate	**+ 45,60**
Art. + CS	Solenoid bolt for pin key inserted available backsets 27, 32 and 37)	**+ 47,90**
Art. + PK	Solenoid bolt prepared to accept the swiss round cylinder 22mm diam. Only available in backset 35mm - supplied without cylinder	**+ 71,80**
	Extra charge: mm 60	**+ 71,80**
	Packaging: solenoid bolt, armature plate, cylinder screw and connector	

Art.	Description	€
	COVER FOR VERTICAL ELECTRIC BOLT TO BE APPLIED IN CYLINDER / CYLINDER AND HANDLE VERSION Electric bolt cover and strike plate in black painted steel Cover dimensions for electric bolt: mm 340 x 46 x 27 Cover dimensions for strike plate: mm 340 x 30 x 27	
0230930DX	Right-hand	**174,30**
0230930SX	Left-hand	**174,30**
	Identify whether right or left hand according to the table at the bottom of the page Available sizes: mm 30	

	STRIKE PLATE FOR ELECTRIC BOLTS PRIMA AND CLASSICA SERIES Supplied as standard in the packaging of electric bolts series 246, 248, 256, 258, 268, 278, OP: Dimensions: mm 150 x 25 x 3	
02258D	Stainless steel strike plate with magnet	**43,30**
02258DSA	Stainless steel strike plate with magnet and anti-rebound ball	**71,80**
	Supplied as standard in the packaging of electric bolts series 259 and 279:	
02259	Stainless steel strike plate	**43,30**
02259SA	Stainless steel strike plate with anti-rebound ball	**71,80**

COVER APPLICATION

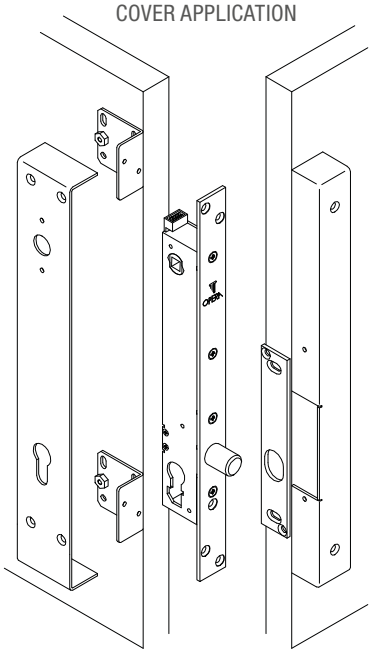

CHART TO IDENTIFY THE HAND OF THE CARTER

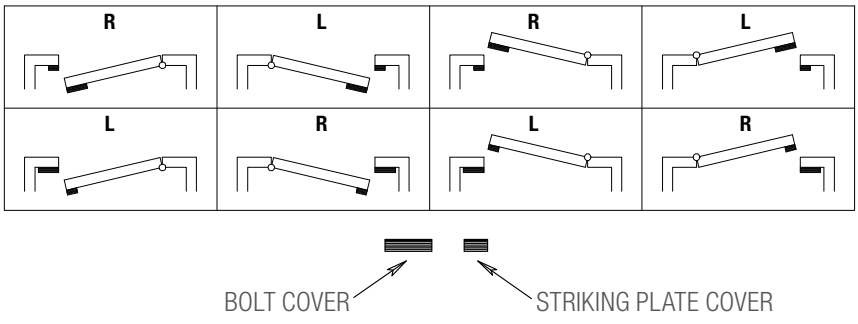

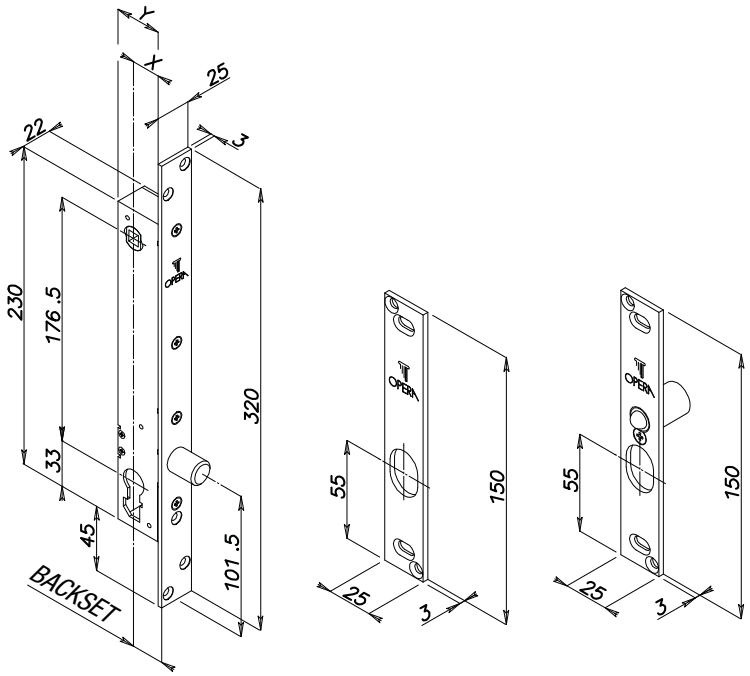

BACKSET	X	Y
25	22	35
30	27	40
35	32	45
60	57	70

SOLENOID BOLT MOUNTING

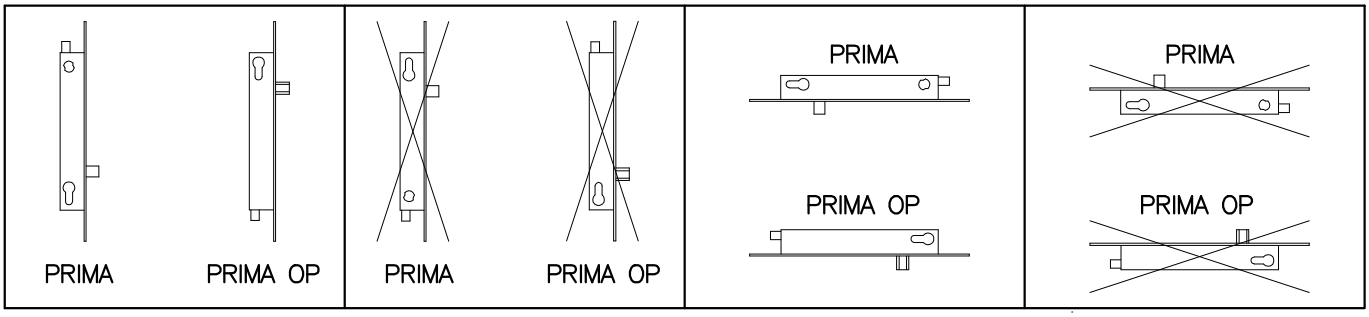

YES | **NO** | **ON DEMAND ONLY** | **NO**

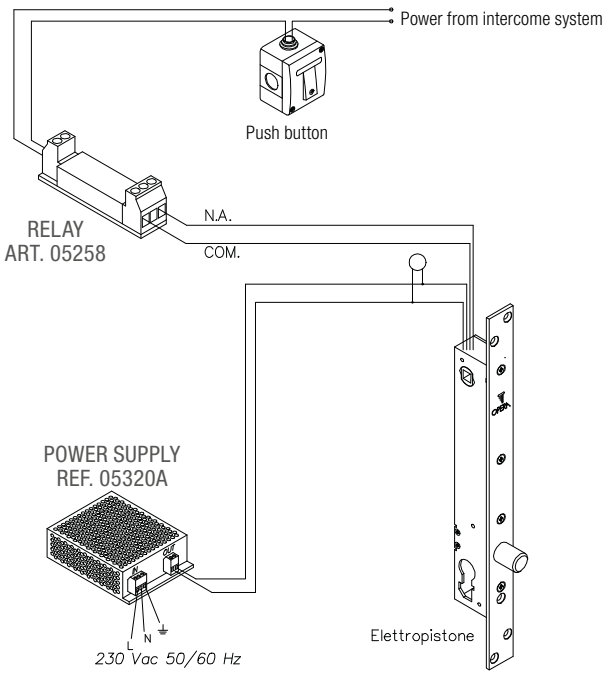

Art.	Description	€

OP55036

SOLENOID BOLT FOR SINGLE DOOR

(Spare parts - Interchangeable with Corni type solenoid locks)
Mechanical opening with European type cylinder
(cylinder with internal knob not usable)
Striking plate in stainless steel (mm) 320 x 25 x 3
Armature plate in stainless steel (mm) 150 x 25 x 3 with alignment magnet
Deadbolt in anti-cutting hardened steel with mechanical block in closed position
Deadbolt dimensions (mm): extension 20, diameter 18 x 14
Operating voltage: from 10 to 30 Vdc
Absorbed current: 2.5/3 A peak - 130/230 mA for permanent maintenance with electronic control
Internal microprocessor control electronics
Rapid plug-in connector
Ready for interlocking connection of 2 or more doors
N.O. Opening control
Deadbolt position contact C. / N.O. / N.C
Opto-electronic bolt position control
Magnetic door position sensor
Push buttons for monitoring and adjustment of relocking times from 0-5 seconds upon approach of the door and from 0-60 seconds if the door is not opened
The timings can be disabled for use of the solenoid bolt with external control electronics

OP55036	Fail unlocked deadbolt open without power	**498,20**
OP55038	Fail locked deadbolt closed without power	**498,20**

Backsets available (mm): 25 - 30 - 35
Packaging: solenoid bolt,armature plate, cylinder screw and connector

OP55038

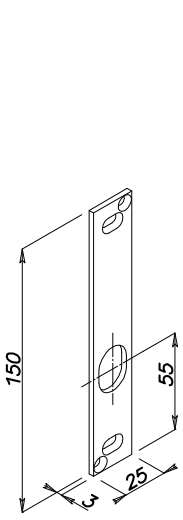

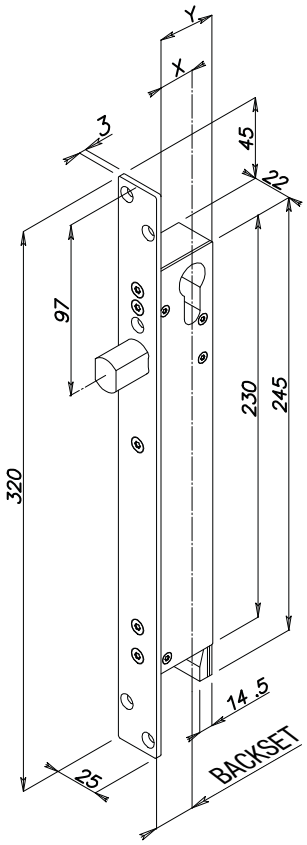

BACKSET	X	Y
25	22	35
30	27	40
35	32	45

OP5503910

OP55039

Art.	Description	€

FAIL LOCKED / FAIL UNLOCKED SOLENOID BOLT FOR SINGLE DOOR

(Spare parts - Interchangeable with Corni type solenoid locks)
Mechanical opening with European type cylinder
(cylinder with internal knob not usable)
Striking plate in stainless steel (mm) 320 x 25 x 3
Armature plate in stainless steel (mm) 150 x 25 x 3
Latch in anti-cutting hardened steel not reversible
(indicate the opening hand - see drawing below)
Latch dimensions (mm): 16, diameter 18 x 14
Operating voltage: from 10 to 30 Vdc
Absorbed current: 2.5/3 A peak - 130/230 mA for permanent maintenance with electronic control
Internal microprocessor control electronics
Rapid plug-in connector
N.O. Opening control
Monitored latch position contact C. / N.O. / N.C. (only for OP55039)
Opto-electronic Monitored latch position control
Push buttons for monitoring and adjustment of the relocking times from 0-60 seconds
The timing can be disabled for use of the solenoid bolt with external control electronics

OP55039.1	Fail secure - Right hand	**498,20**
OP55039.2	Fail secure - Left hand	**498,20**
OP5503910.1	Fail safe - Right hand	**525,50**
OP5503910.2	Fail safe - Left hand	**525,50**

Backsets available (mm): 25 - 30 - 35
Packaging: solenoid bolt,armature plate, cylinder screw and connector

HANDING

RIGHT

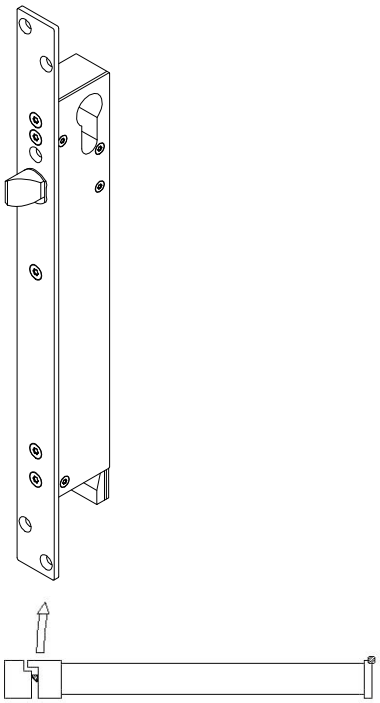

LEFT

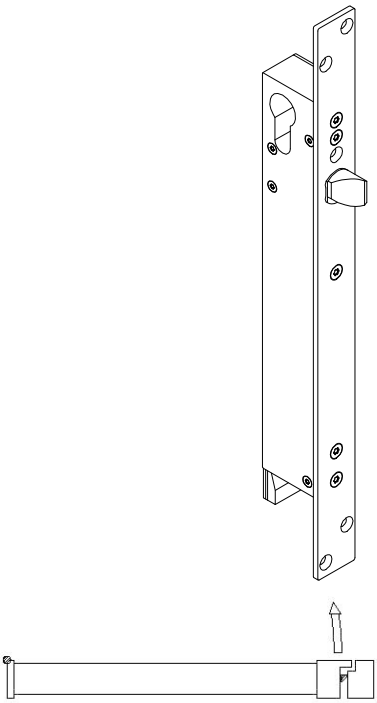

Art.	Description	€

SOLENOID BOLT FOR INTERLOCKING DOORS

Mechanical opening with European type cylinder
(cylinder with internal knob not usable)
Mechanical opening with European type cylinder
(cylinder with internal knob not usable)
Striking plate in stainless steel (mm) 440 x 30 x 4
Armature plate in stainless steel (mm) 440 x 25 x 4 with alignment magnet
Deadbolt in anti-cutting hardened steel with mechanical block in closed position
Anti-rebound ball-catch mounted directly on the Armature plate with the slide in ABS on the solenoid lock striking plate
Deadbolt dimensions (mm): extension 23, diameter 22
Version with handle frame backset with 85 mm. cylinder hole
For lock body dimensions see page 145
Operating voltage: from 10 to 30 Vdc
Absorbed current: 3 A peak - 130/230 mA for permanent maintenance with electronic control
Internal microprocessor control electronics
Rapid plug-in connector
Ready for interlocking connection of 2 or more doors

N.O. Opening, Block, Emergency and Alarm Reset Controls
Deadbolt position contact C. / N.O. / N.C
Door position contact N.O. for the Open / Closed monitoring function or for use on an external door alignment sensor
Open Collector Alarm contact for Prolonged Opening from 0 to 120 seconds, Fault, Emergency, simultaneous Opening of 2 or more doors if in interlocked configuration
Opto-electronic bolt position control - Magnetic door position sensor
Push buttons for monitoring and adjustment of relocking times from 0-5 seconds upon approach of the door and from 0-60 seconds if the door is not opened
The timings can be disabled for use of the solenoid bolt with external control electronics
Push button for monitoring and adjustment of the Prolonged Door Open Alarm trigger (function can be disabled)

Fail unlocked deadbolt open without power:

2462030	Without handle frame	**736,40**
2462830	With handle frame (mm) 8	**808,30**

Fail locked deadbolt closed without power:

2482030	Without handle frame	**736,40**
2482830	With handle frame (mm) 8	**808,30**

Backset available (mm): mm 30
Compliance: EN12209 grade 7 burglar
Packaging: solenoid bolt,armature plate, cylinder screw and connector

Art.	Description	€

SOLENOID BOLT FOR SINGLE DOOR

Mechanical opening with European type cylinder
(cylinder with internal knob not usable)
Striking plate in stainless steel (mm) 440 x 30 x 4
Armature plate in stainless steel (mm) 440 x 25 x 4 with alignment magnet
Deadbolt in anti-cutting hardened steel
with mechanical block in closed position
Anti-rebound ball-catch mounted directly on the Armature plate with the slide in ABS on the solenoid lock striking plate
Deadbolt dimensions (mm): extension 23, diameter 22
Version with handle frame backset with 85 mm. cylinder hole
For lock body dimensions see below
Operating voltage: from 10 to 30 Vdc
Absorbed current: 3 A peak - 130/230 mA for permanent maintenance with electronic control
Internal microprocessor control electronics
Rapid plug-in connector
Ready for interlocking connection of 2 or more doors
N.O. Opening control
Deadbolt position contact C. / N.O. / N.C
Opto-electronic bolt position control
Magnetic door position sensor
Push buttons for monitoring and adjustment of relocking times from 0-5 seconds
upon approach of the door and from 0-60 seconds if the door is not opened
The timings can be disabled for use of the solenoid bolt with external control electronics

	Fail unlocked deadbolt open without power:	
2562030	Without handle frame	**622,40**
2562830	With handle frame (mm) 8	**694,30**
	Fail locked deadbolt closed without power:	
2582030	Without handle frame	**622,40**
2582830	With handle frame (mm) 8	**694,30**

Backset available (mm): mm 30
Compliance: EN12209 grade 7 burglar
Packaging: solenoid bolt,armature plate, cylinder screw and connector

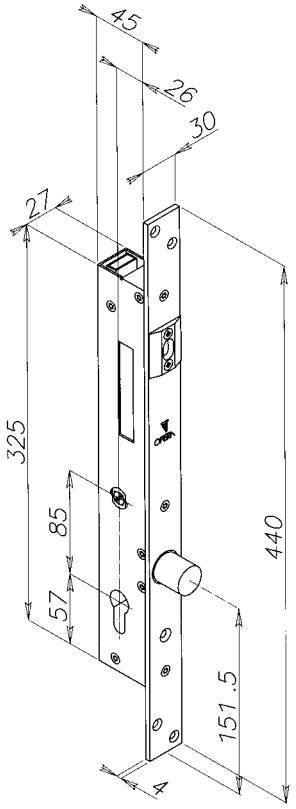

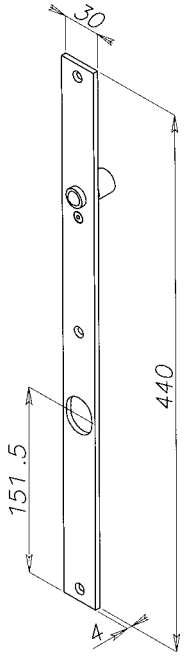

CLOSING SYSTEM WITH PRIMA SERIE SOLENOID LOCK

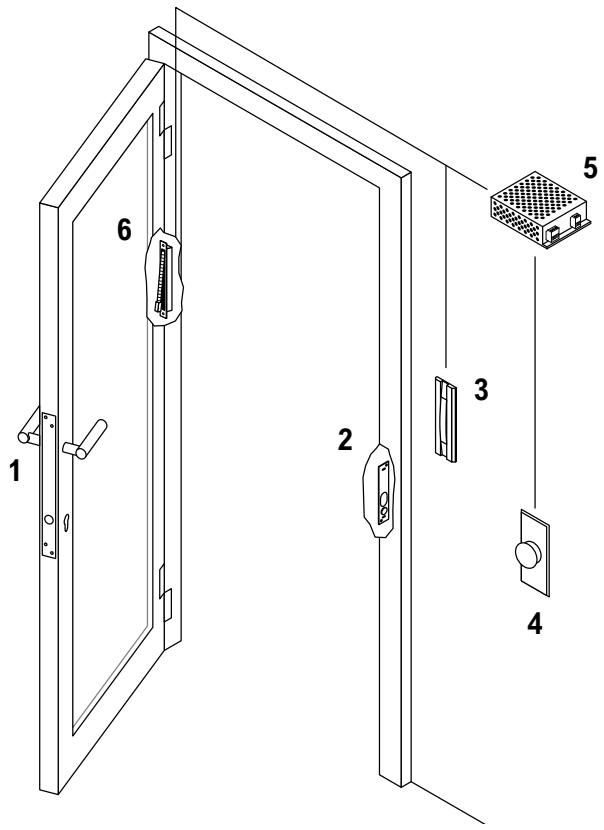

LEGENDA

1 Security solenoid lock
2 Striking plate
3 Indicator lamps
4 Opening button
5 Power supply
6 Concealed lead cover

CLOSING SYSTEM WITH PRIMA SERIE SOLENOID LOCK MOUNTED ON THE FRAME

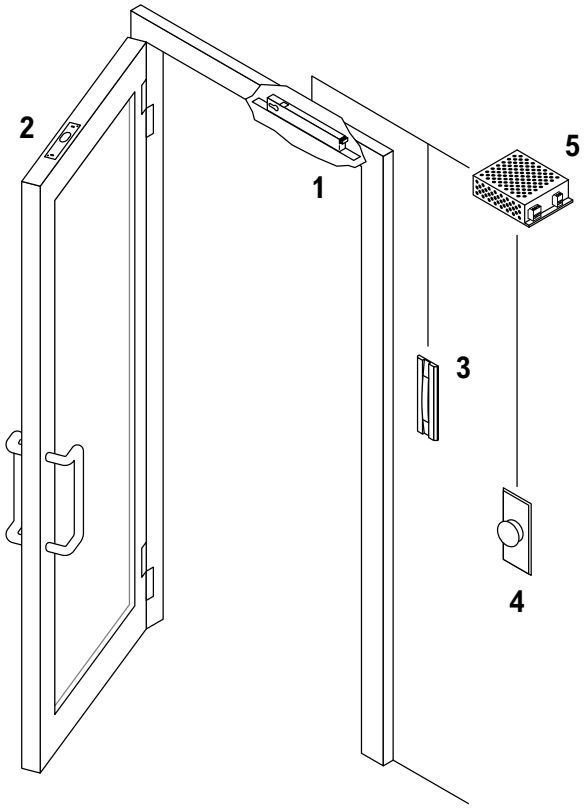

LEGENDA

1 Security solenoid lock
2 Striking plate
3 Indicator lamp
4 Opening button
5 Power supply

TWO DOORS INTERLOCKING SYSTEM WITH PRIMA SERIE SOLENOID LOCKS

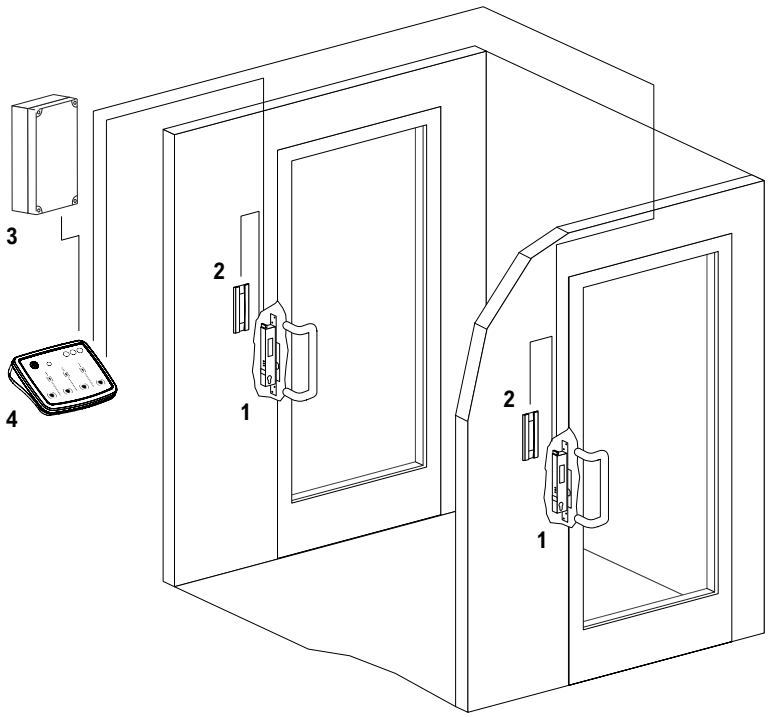

LEGENDA

1 Solenoid Bolt
2 Indicator lamps
3 Power Supply
4 Desktop Console

THREE DOORS INTERLOCKING SYSTEM WITH PRIMA SERIE SOLENOID LOCKS

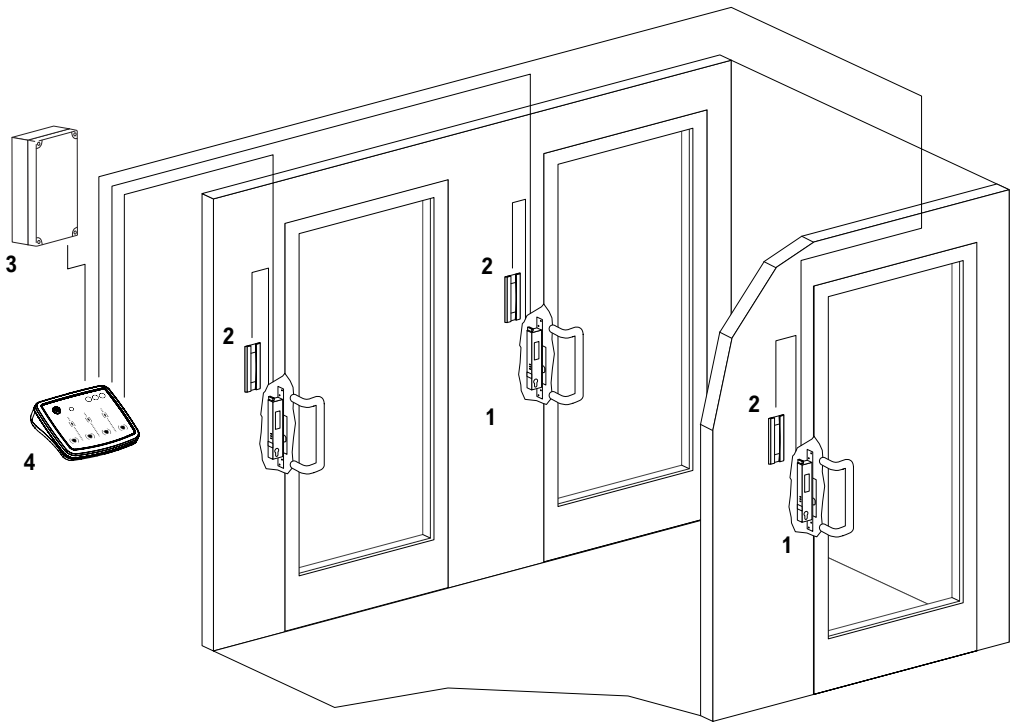

LEGENDA

1 Solenoid Bolt
2 Indicator lamps
3 Power Supply
4 Desktop Console

CLASSICA

- SECURITY SOLENOID LOCK
- ANTI CUTTING AND ANTI BREAKING AND ENTERING REVOLVING BOLT
- MANUAL ACTIVATION WITH EUROPEAN CYLINDER AND HANDLE
- FOR AN INTENSIVE AND CONTINOUS USE
- IDEAL FOR ALUMINIUM OR STEEL DOORS, SINGLE OR INTERLOCKED CONFIGURATION

OPERA
OPERATING ACCESS

CLASSICA

www.opera-italy.com

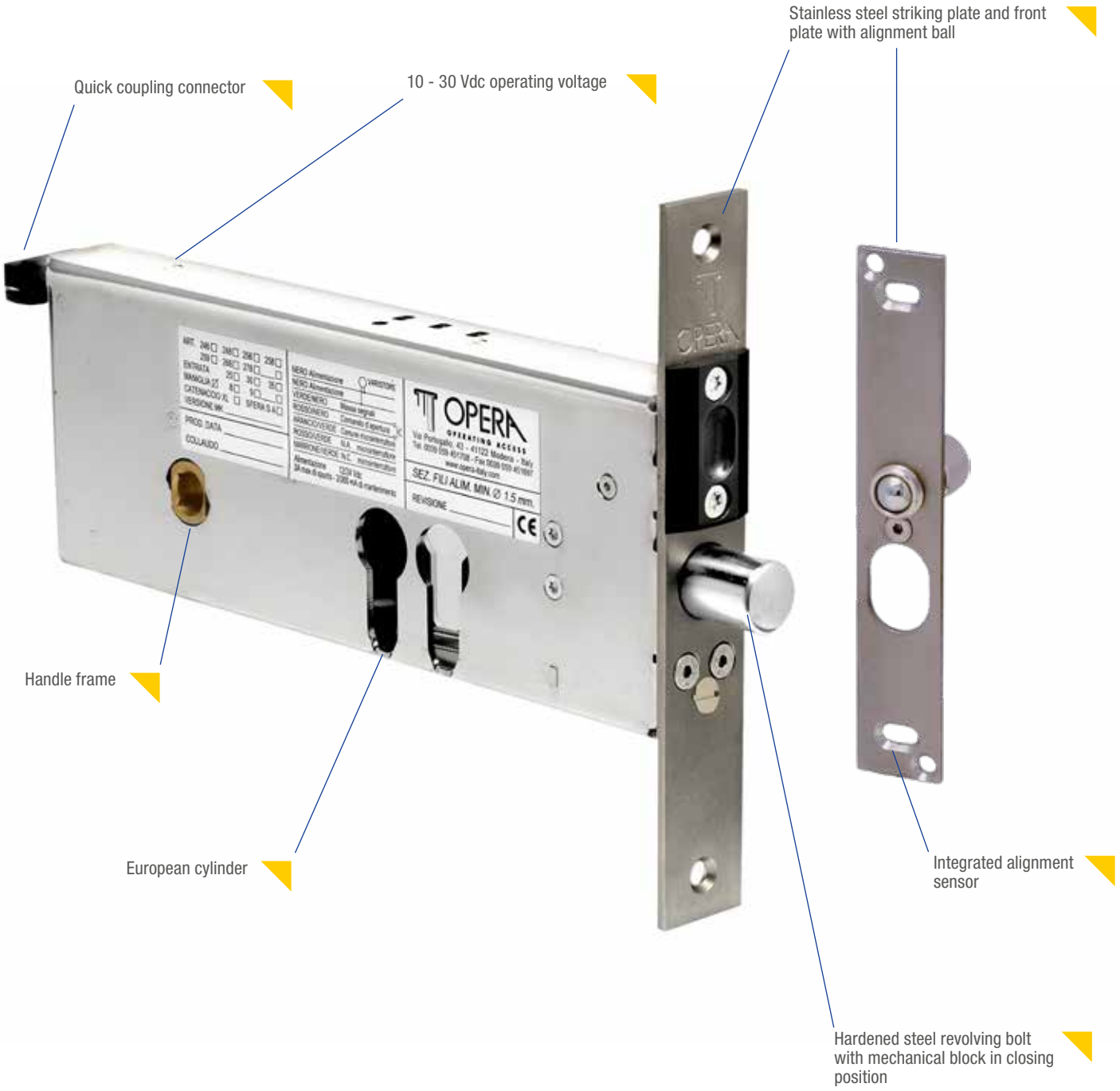

PLUS

- Horizontal security solenoid lock for emergency exits
- Hardened steel revolving bolt with mechanical block in closing position
- Fail secure deadbolt version without power
- High resistance to breaking and entering
- Mechanical opening with European cylinder or handle
- Automatic closing with adjustable timings

INTERNAL OPENING

EXTERNAL OPENING

PLUS EXAMPLE

- Horizontal security solenoid lock for emergency exits
- Insertion on the door
- Single door operating system (condominiums, offices, companies.)
- Interlocked doors operating system (banks, jewelries, corporations)
- To be matched with intercom and access control systems

26600

26800SA

Art.	Description	€
	SOLENOID BOLT FOR INTERLOCKING SYSTEM Mechanical opening with European type cylinder **(cylinder with internal knob not usable)** Striking plate in stainless steel (mm) 160 x 25 x 3 Armature plate in stainless steel (mm) 150 x 25 x 3 with magnet adjustable in extension Revolving bolt in anti-cutting hardened steel with mechanical block in closed position Deadbolt dimension (mm): extension 20 (25 in the XL version), diameter 16 Lock body dimensions on page 153 Operating voltage: from 10 to 30 Vdc Absorbed current: 2.5/3 A peak - 130/230 mA for maintenance with electronic control Internal microprocessor control electronics Rapid plug-in connector Ready for interlocking connection of 2 or more doors N.O. Opening, Block, Emergency and Alarm Reset Controls Deadbolt position contact C. / N.O. / N.C Door position contact N.O. for the Open / Closed monitoring function or for use of an external door alignment sensor Open Collector Alarm contact for Prolonged Opening of the door, Fault, Emergency, simultaneous Opening of 2 or more doors if in interlocked configuration. Opto-electronic bolt position control Magnetic door position sensor Push buttons for monitoring and adjustment of relocking times from 0-5 seconds upon approach of the door and from 0-60 seconds if the door is not opened. The timings can be disabled for use of the solenoid bolt with external control electronics Push button for monitoring and adjustment of the Prolonged Door Open Alarm trigger	
	Fail unlocked deadbolt open without power	
26600	Without handle frame	**595,10**
26608	With handle frame (mm) 8	**670,30**
	Fail locked deadbolt closed without power	
26800	Without handle frame	**595,10**
26808	With handle frame (mm) 8	**670,30**
	Backsets available (mm): 70 and 90 on the same mechanics	
	Options On request:	
Art. + XL	Extended deadbolt + 5 mm.	**+ 35,90**
Art. + SA	Solenoid bolt with anti-rebound ball-catch mounted directly on the Armature plate with the slide in ABS on the striking plate	**+ 45,60**
	Packaging: solenoid bolt,armature plate, cylinder screw and connector	

27608

27808SA

Art.	Description	€
	SOLENOID BOLT FOR SINGLE DOOR Mechanical opening with European type cylinder **(cylinder with internal knob not usable)** Striking plate in stainless steel (mm) 160 x 25 x 3 Armature plate in stainless steel (mm) 150 x 25 x 3 with magnet adjustable in extension Revolving bolt in anti-cutting hardened steel with mechanical block in closed position Deadbolt dimensions (mm): extension 20 (25 in the XL version), diameter 16 Lock body dime nsions at the b otto m of the p age Operating voltage: from 10 to 30 Vdc Absorbed current: 2.5/3 A peak - 130/230 mA for maintenance with electronic control Internal microprocessor control electronics Rapid plug-in connector Ready for interlocking connection of 2 or more doors N.O. Opening control Deadbolt position contact C. / N.O. / N.C Opto-electronic bolt position control Magnetic door position sensor Push buttons for monitoring and adjustment of relocking times from 0-5 seconds upon approach of the door and from 0-60 seconds if the door is not opened. The timings can be disabled for use of the solenoid bolt with external control electronics	
	Fail unlocked deadbolt open without power:	
27600	Without handle frame	**464,00**
27608	With handle frame (mm) 8	**548,30**
	Fail locked deadbolt closed without power:	
27800	Without handle frame	**464,00**
27808	With handle frame (mm) 8	**548,30**
	Inter-changeable with Corni solenoid bolt:	
OP54036	Fail safe - With handle frame (mm) 8	**612,20**
OP54038	Fail secure - With handle frame (mm) 8	**612,20**
	Backsets available (mm): 70 and 90 on the same mechanics	
	Options On request:	
Art. + XL	Extended deadbolt + 5 mm.	**+ 35,90**
Art. + SA	Solenoid bolt with anti-rebound ball-catch catch mounted directly on the armature plate with the slide in ABS on the striking plate	**+ 45,60**

OP54038

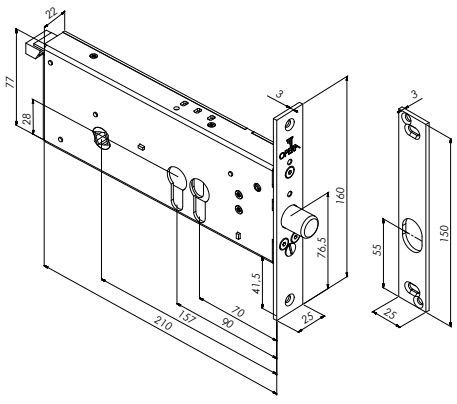

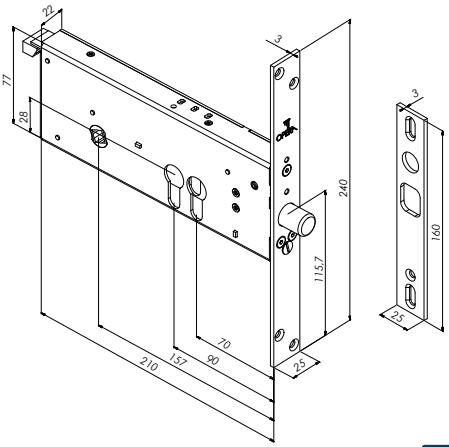

Art.	Description	€

SOLENOID BOLT FOR SINGLE DOOR

27908

27908SA

Mechanical opening with European type cylinder
(Cylinder with internal knob not usable)
Front and strike plate in hardened steel
Non-reversible anti-cut bolt in tempered steel
(Indicate the opening direction - see drawings at the bottom of the page)
Bolt dimensions: 16mm in diameter x 14 x 16mm extension
Lock body dimensions: see page 175
Power supply: 10 to 30 Vdc - 2.5/3 A peak
130/230 mA maintenance with electronic control
Internal microprocessor control electronics
Connection via quick-release connector
N.C. Opening command
C./N.O./N.C. Bolt position contact
Opto-electronic control of the bolt position
Buttons for monitoring and adjusting closure times from 0-60 sec. if the door is not opened.
Timings can be disabled for external electrobolt management

Fail secure:

27900.1	Without Square handle plate right hand	**564,00**
27900.2	Without Square handle plate left hand	**564,00**
27908.1	With 8mm square handle - right hand	**548,30**
27908.2	With 8mm square handle - left hand	**548,30**

Backsets available (mm): 70 and 90 on the same mechanics

OP54039.1	With 8mm square handle - right hand	**612,20**
OP54039.2	With 8mm square handle - left hand	**612,20**
Art. + SA	Solenoid bolt with anti-rebound ball mounted directly on the strike plate with ABS slide on the front (only for series 279)	**+ 45,60**

Packaging: solenoid bolt,armature plate, cylinder screw and connector

02708 — **205,10**

CARTER FOR HORIZONTAL SOLENOID LOCK FOR SURFACE FIXING IN CYLINDER / CYLINDER WITH HANDLE VERSION

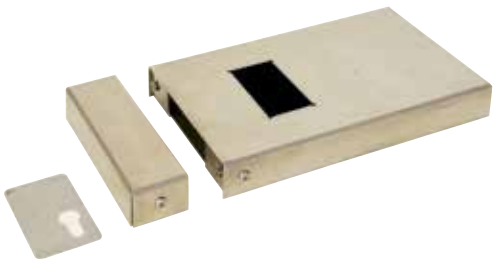

Solenoid and Armature plate carter body in stainless steel
Carter for solenoid lock dimensions (mm): 250 × 165 × 34
Carter for Armature plate dimensions (mm): 45 x 165 x 34
Reversible hand

Backsets available (mm): 70 and 90 on the same carter

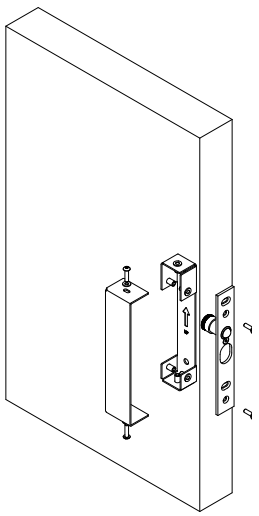

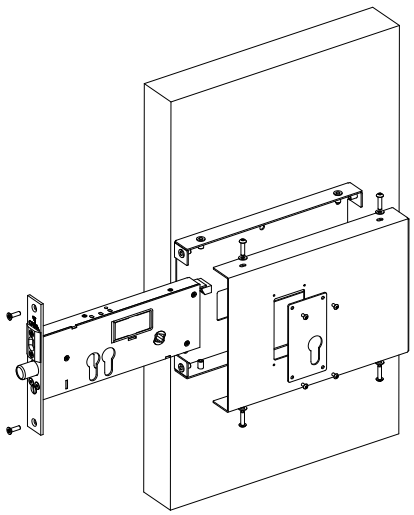

HANDING OF THE LOCK

Right .1

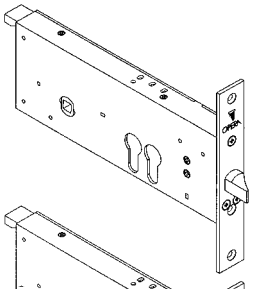

Left .2

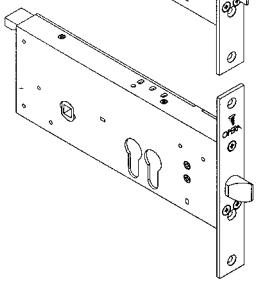

Art.	Description	€
	ARMATURE PLATE FOR PRIMA AND CLASSICA SERIES Normally supplied with solenoid bolt 246, 248, 256, 258, 268, 278, OP: Dimensions: mm 150 x 25 x 3	
02258D	Armature plate in stainless steel	**43,30**
02258DSA	Armature plate in stainless steel with anti-rebound ball-catch	**71,80**
	Normally supplied with solenoid bolt 259,279:	
02259	Armature plate in stainless steel	**43,30**
02259SA	Armature plate in stainless steel with anti-rebound ball-catch	**71,80**

	STRIKING PLATE FOR CLASSICA SERIES SOLENOID LOCKS, SUPPLIED WITH RIM COVER Dimensions: mm 160 x 25 x 3	
02260D	Armature plate in stainless steel	**43,30**
02260DSA	Armature plate in stainless steel with anti-rebound ball-catch	**71,80**
	Standard supplied with the carter package serie Classica art. 02708	

APPLICATION EXAMPLES

CLOSING SYSTEM WITH CLASSICA SERIES SOLENOID BOLT

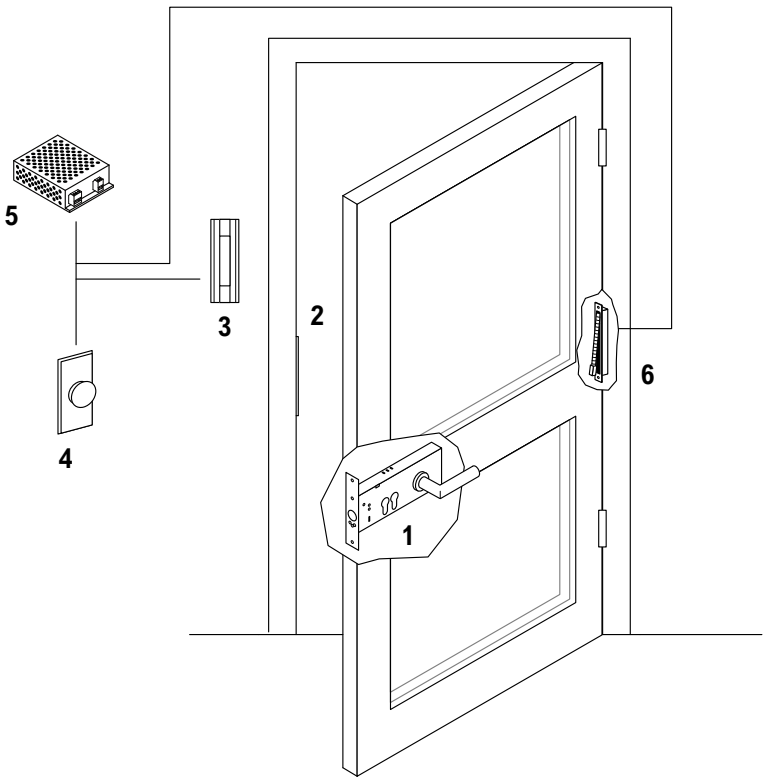

LEGENDA

1 Solenoid lock
2 Striking plate
3 Indicator lamp
4 Button
5 Power supply
6 Lead covers

GATE

- SECURITY SOLENOID LOCKS FOR GARAGES AND AUTOMATIC GATES
- ANTI CUTTING HARDENED STEEL REVOLVING BOLT WITH MECHANICAL BLOCK IN CLOSING POSITION
- MANUAL ACTIVATION WITH EUROPEAN CYLINDER
- ENTIRELY IN STAINLESS STEEL, RESISTANT TO WEATHER CONDITIONS EXPOSURE
- ACTIVATION THROUGH GATE REMOTE CONTROL

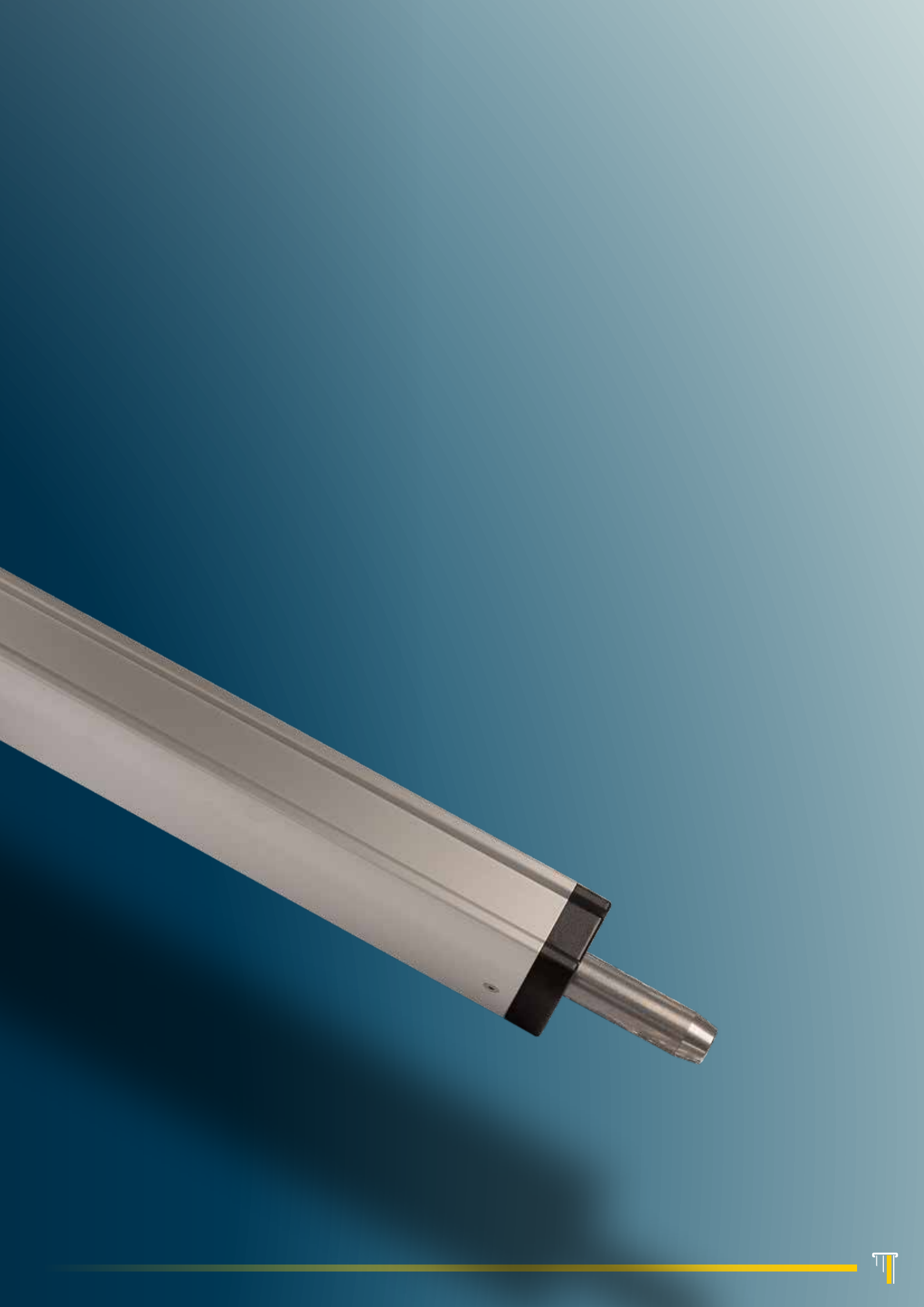

GATE LOCK

www.opera-italy.com

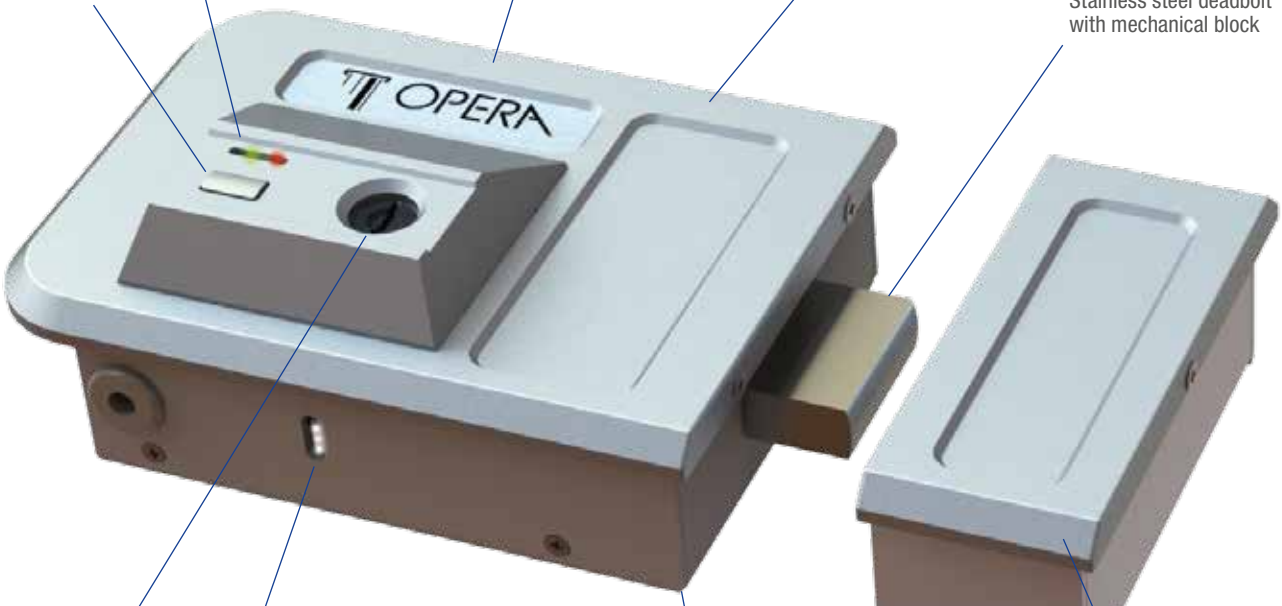

PLUS

- Rim solenoid lock for gates and doors
- Fail secure deadbolt without power
- Resistant to weather conditions
- Interchangeable with traditional electric locks
- Automatic deadbolt closing
- Rounded cylinder with adjustable entry

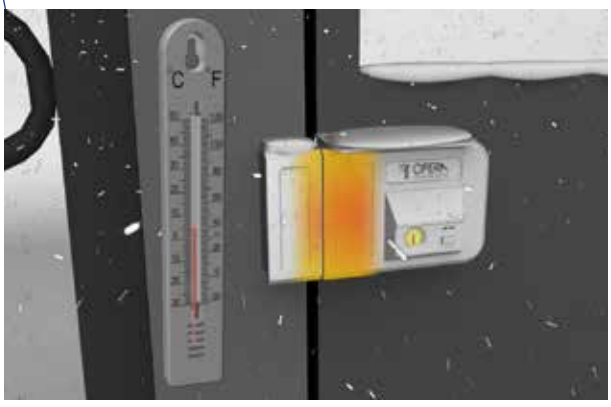

This feature is automatically activated when temperature drops below 5°C (41°). The antifreeze protection integrated into the lock body prevents freezing of the mechanical parts, including cylinder

SOLENOID LOCK ON AN EXTERNAL GATE

SOLENOID LOCK ON A DOOR

PLUS EXAMPLE

1. Closed gate
2. Open gate
3. Closed door
4. Open door

GATE LOCK

www.opera-italy.com

Serie 28001 - 28003
Right hand

Serie 28002

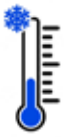

+5°C

With internal self heating

Art. 00280

Art.	Description	€
	ELECTRIC LOCK FOR GATES AND DOORS Lock body and strike plate in stainless steel Lock and strike plate cover in anodized aluminum Latch closed in the entrance direction. Mechanical opening from the outside with a round cylinder Mechanical opening from the inside with versions featuring a cylinder, knob, or button Adjustable entry: 50mm - 60mm - 70mm - 80mm Latch in stainless steel, dimensions 35mm x 12mm (extension 25mm) Anti-burglary device for the latch in the closed position Power supply: 12/24 Vdc - 12/18 Vac Current: 1.2 A peak, maintenance 380 mA Internal microprocessor-based electronic circuit Opening command at 12 Vac/dc from intercom or via relay Hall effect sensor for door position Automatic re-locking after 2 seconds of door contact Selectable automatic re-locking from 5 to 60 seconds if the door remains unopened Output relay C./N.O./N.C. for latch status indication (M version only) Bicolor LED (red/green) for latch status indication (open/closed) LED in the lower position for nighttime indication, blue in the closed position and white in the open position to illuminate the ground Suitable for outdoor use, **with internal heating system if the temperature drops below 5 °C** **Supplied with cylinder:**	
28001.1	Internal opening version with chain cylinder - Right hand	**454,10**
28001.2	Internal opening version with chain cylinder - Left hand	**454,10**
28002.1	Internal opening version with knob - Right hand	**479,00**
28002.2	Internal opening version with knob - Left hand	**479,00**
28003.1	Internal opening version with key and button - Right hand	**467,10**
28003.2	Internal opening version with key and button - Left hand	**467,10**
	Optional features:	
	Art. + SC supply without cylinder (e.g., 28001.150) Specify the type of cylinder used (**Cisa, Iseo, Viro, Feb, Yale**)	**- 4,10**
	Art. + N black anodized cover (e.g., 28001.1N)	**+ 13,60**
	Art. + M version with remotely controllable latch status relay (e.g., 28001.1M)	**+ 39,80**
	Art. + XL latch with increased extension + 10 mm	**+ 24,90**
	Art. + XXL latch with increased extension + 20 mm	**+ 26,00**
	Art. + P addition of an opening button on Art. 28002 (e.g., 28002.1P)	**+30,80**
	Art. + CP supplied with flat strike plate (e.g., 28002.1CP)	**-5,00**
	Art. + DR version with raised internal defender by 5 mm for the insertion of round security cylinders (e.g., 28001.10R)	**21,00**
	5mm thick aluminum frame for post-sale conversion of electric locks without 280 series into DR version (accessory)	
00280A	Silver color	**21,00**
00280AN	Black color	**21,00**
	Use: Security electric lock to be applied to pedestrian gates exposed to the elements and condominium wooden doors.	
00282	**COVER PLATE** Stainless steel cover plate for mounting the Gate lock on a gate 280 - 281 - 282	**30,80**
	SPESSORI	
00280C	Stainless steel spacer (1mm) for 280 series striking plate	**3,20**
00280S	Stainless steel spacer (1mm) for lock 280 series	**5,20**
00280UNI	**UNIVERSAL ADAPTABILITY STRIKE PLATE** Stainless steel strike plate, 3 mm thick, with universal mounting holes and screw inserts for securing the electric lock series 280. With the base for attaching the strike plate **Use:** For installation on the holes of previous electric locks	**45,10**

Art.	Description	€
	CYLINDER FIXING COLLAR (SPARE PART)	
00280.1D	Fixing collar for CISA-type cylinder, Right hand	34,00
00280.2D	Fixing collar for CISA-type cylinder, Left hand	34,00
00280.1E	Fixing collar for ISEO type cylinder, Right hand	34,00
00280.2E	Fixing collar for ISEO type cylinder, Left hand	34,00
00280.1F	Fixing collar for VIRO-type cylinder, Right hand	34,00
00280.2F	Fixing collar for VIRO-type cylinder, Left hand	34,00
00280.1G	Fixing collar for FEB-type cylinder, Right hand	34,00
00280.2G	Fixing collar for FEB-type cylinder, Left hand	34,00
00280.1H	Fixing collar for YALE-type cylinder, Right hand	34,00
00280.2H	Fixing collar for YALE-type cylinder, Left hand	34,00
00171A	**ROUND CYLINDER (SPARE PART) FOR SERIES 280** Internal and external cylinder for series 290.01 and 28003 Supplied with 3 keys	25,00
	STRIKING PLATE (REPLACEMENT) FOR 280 SERIES	
00281.1	Right hand silver front plate	52,20
00281.2	Left hand silver front plate	52,20
00281.1N	Right hand dark front plate	55,70
00281.2N	Left hand dark front plate	55,70
00281CP	**FLAT STRIKING PLATE (REPLACEMENT) FOR SERIES 280 - 282** Stainless steel striking plate with postion magnet Dimensions: mm. 110 × 40 × 3	45,00

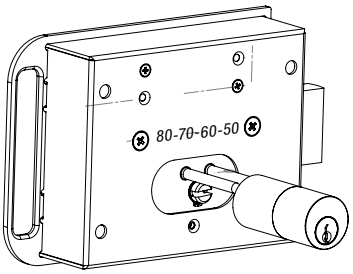

Round cylinder for gate

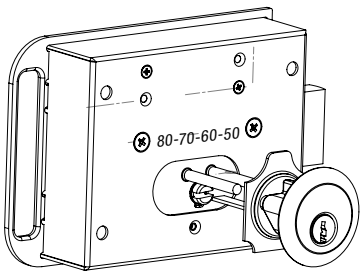

Installation of a stapled cylinder
(not supplied by us)

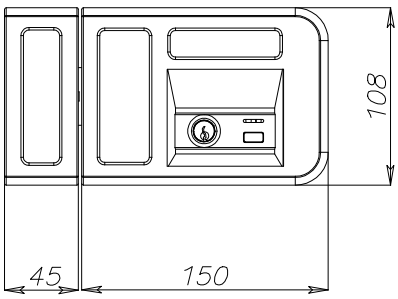

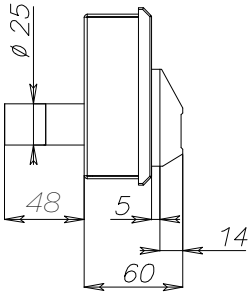

BACKSET MM 90 E 100

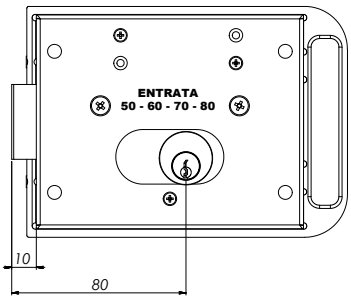

Backset 90mm - version XL

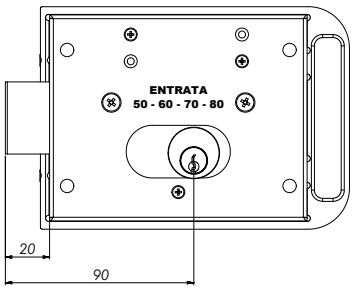

Backset 100mm - version XXL

GATE BOLT

www.opera-italy.com

Art.	Description	€
	ELECTRIC BOLT FOR AUTOMATIC GATES GATE BOLT Version: **For surface fixing** Lock body in corrosion-treated steel Cover housing in stainless steel (only for versions 28700 and 28710). Body dimensions: mm 300 x 45 x 42 Mechanical opening and closing with European cylinder (through hole from both sides) - Supplied without internal cylinder (mm 30÷10). To identify the length of the double cylinder, refer to the drawings on page 185. Rubber protection for the cylinder hole against atmospheric agents Latch in stainless steel, diameter mm 18 x extension mm 28 (travel mm 25) Anti-burglary device for the latch with "total reaction" block in the closed position (only for version 28700) Output contact C./N.O./N.C. Power supply: 12/24 Vdc (see art. 05332A on page 219)) Current absorbed: 5 A peak, 550 mA maintenance at 12 Vdc 3 A peak, 280 mA maintenance at 24 Vdc	
28700	Latch closed in the absence of power - Stainless steel cover plate	**500,30**
28700N	Latch closed in the absence of power - Black painted steel cover	**470,00**
28710	Latch open in the absence of power - Stainless steel cover plate	**520,50**
28710N	Latch open in the absence of power - Black painted steel cover	**490,00**
Art. + VR	**On request:** Vertical operation version with the latch moving upwards (only for art. 28700 and 28700N)	**/**
	Use: For automatic gates and overhead garage doors.	

02290	**FLOOR STRIKE** Stainless steel striking plate for bolt insertion into the floor. For item Art. 28700 - 28710 - 28720 - 28800 and 28800LC Dimension : mm 120 diameter x 5mm thickness	**55,70**

LENGHT OF THE DOUBLE CYLINDER

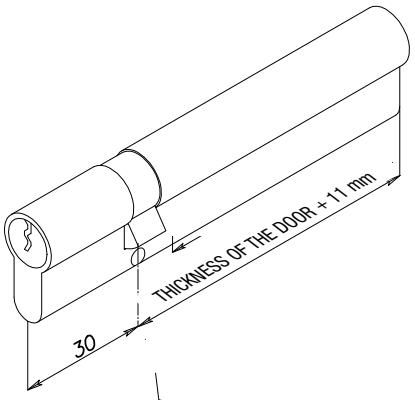

LENGHT OF THE DOUBLE CYLINDER
AND TAMPER DEFENDER ITEM CODE 02250

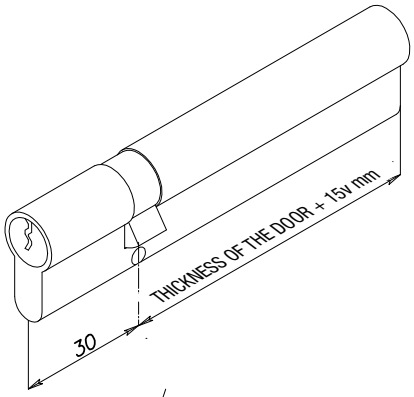

LENGHT OF THE HALF CYILINDER

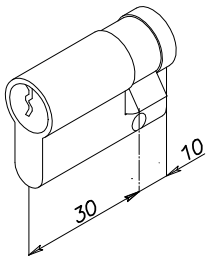

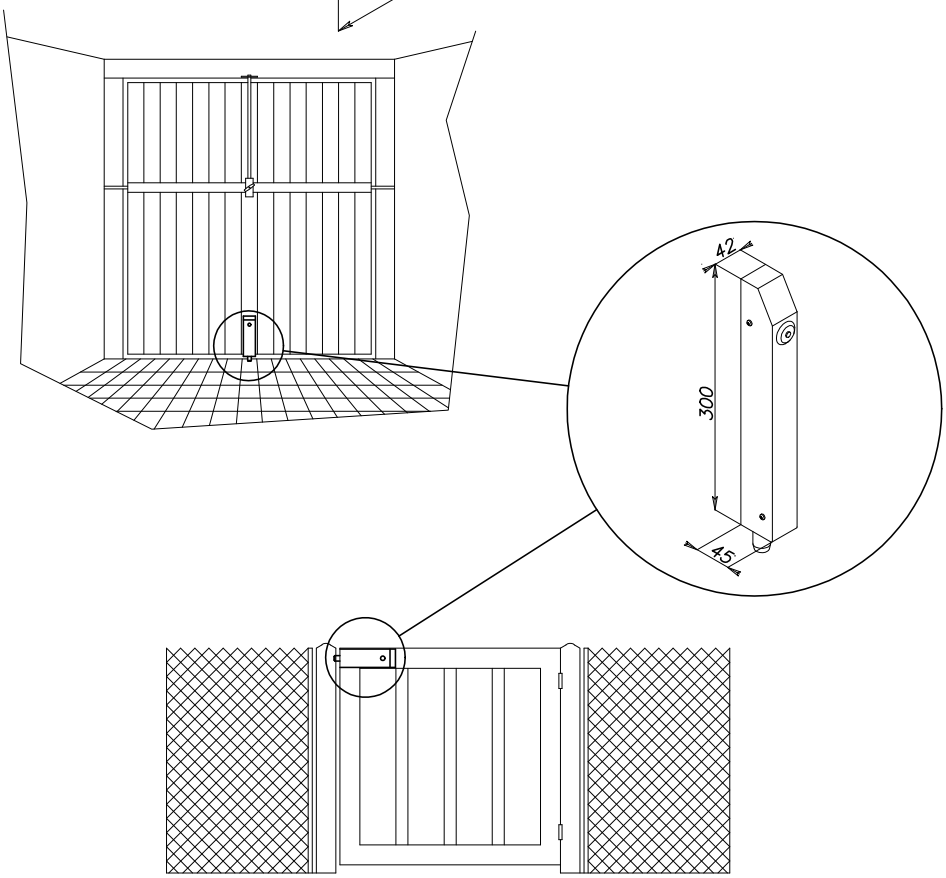

MOUNTING DRAWING

Standard

On demand - without
mechanical deadlocking

Standard

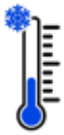

+5°C
Internal self heating

Art.	Description	€
	MOTOR DEADBOLT FOR AUTOMATIC GATES LEGION SERIES **Fail locked version - deadbolt closed with no power** Lock body in stainless steel, aluminium cover with plastic ends Dimensions: 515 x 41,5 x 57,5 Mechanical opening with Euro-profile cylinder (from both sides) Cylinder not included - stainless steel fixing plate not included To select the length of the cylinder see page 167 - Internal side cylinder length mm 35- 10 Steel made bolt diameter (mm) 18 x extension 55 (stroke 55) Bolt "total reaction" burglar device in closed position C. / N.O. / N.C. output contact Operating voltage: 12 - 30Vdc / 12 - 18Vac Absorbed current 600mA at 12V / 300 mA at 24V Internal self-heating - when temperature drops under 5°C , coil warms-up to avoid freezing Time adjustment: T1 - between 0-5 seconds from re-locking after door opening T2 - between 5-180 seconds if door is not opened T3 - between 1-180 seconds to get an alarm if the door remains open MODE OF OPERATION Automatic mode - opening command by dry contact or electrical impulse and closing controlled by an magnetic sensor Bistable mode - one command to open, one command to close Fail safe function - bolt opens automatically in case of power failure (use item 02295 and a battery)	
28720	Carter in satin anodised finish	**580,90**
28720N	Carter in black anodised finish	**580,90**
	Use: high security motor lock for automatic gates. It can be used downward, upward and horizontally	
02287	**FIXING PLATE** Stainless steel plate for mounting the Legion Bolt , mm 515 x 41,5	**39,10**

02290	**FLOOR STRIKE** Stainless steel striking plate for bolt insertion into the floor. For item 28700 - 28710 - 28720 - 28800 - 28800LC Dimension : mm 120 diameter x 5mm thickness	**55,70**

	RIM MOUNTING STRIKING PLATE Stainless steel body with aluminium cover for 28720 series Dimensionis mm 100 x 57,5 x 41,5	
02291	Silver anodised	**71,10**
02291N	Dark anodised	**71,10**
02292	Stainless steel spacer 3 mm	**11,90**
02293	Stainless steel spacer 1 mm	**3,60**

Art.	Description	€
02295	**FAIL SAFE CIRCUIT** Box in ABS dimensions mm 50 x 40 x 20 Power 12-18 Vac / 15-24 Vdc - Current Max 5A Max power absorption 75 W Stable output 13 Vdc It must be used with battery 00712 - battery charger Led indication in case of power failure **Use:** Automatic one time opening of the bolt in case of power failure	177,80
02250LG	**TAMPER DEFENDER** Matt chromium plated body in hardened steel Dimensions (mm): 90 × 30 x 15 Fixing with through bolt holes from the inside of the door Usable with cylinders which protrude up to 4 mm **Use:** tamper defender for security cylinders Can be used with all cylinders mounted on Maxima electromechanical locks	80,60
	MAGNET FOR DOOR ALIGNMENT Neodymium magnet to be applied for signaling the alignment of the door for the automatic closing of the electro-bolt. Dimensions: mm 50 x 22 x 16	
00287B	Cover color: Brown	12,00
00287W	Cover color: White	12,00

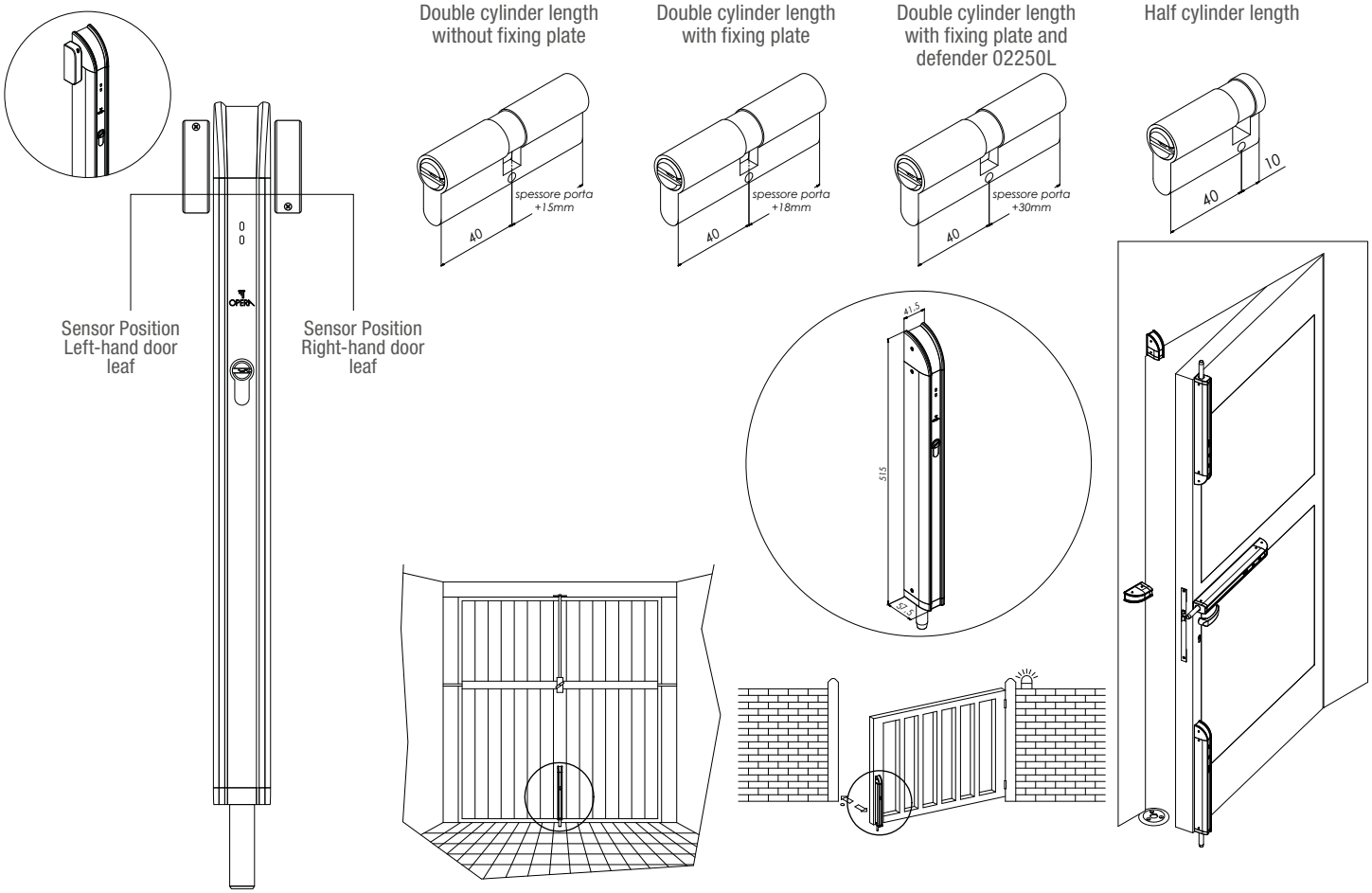

GATE BOLT

www.opera-italy.com

Internal self heating

Art.	Description	€
	SOLENOID LOCK FOR AUTOMATIC GATES Version: **for surface fixing** Lock body in stainless steel, aluminium and anti-corrosion treated steel Casing cover in stainless steel (version 28800) Casing cover in black painted steel (version 28800LC) Flat fixing plate in stainless steel to be welded (version 28800) Dimensions of the body (mm): 335 x 60 x 55 Mechanical opening with Euro-profile cylinder (from both sides) Provided without cylinder To select the length of the cylinder see page 189 Rubber weather protection of the cylinder hole Deadbolt in steel diameter (mm) 20 x extension 60 (stroke 50) Bolt "total reaction" burglar device in closed position C. / N.O. / N.C. output contact Operating voltage : 24 Vdc Absorbed current 5 A peak, 750/900 mA in standby Internal self-heating - when temperature drops under 5°C, coil warms-up to avoid freezing. (standard in 28800 version) Fail locked version - Deadbolt closed without power The internal self-heating is standard in 28800, on demand on 28800LC (28800LCW)	
28800	Carter in stainless steel with fixing plate item 02288	**520,50**
28800LC	Carter in black painted steel without fixing plate item 02288	**337,90**
	On request:	
Art. + OR	Solenoid lock for horizontal operation	**/**
Art + MIC	Solenoid lock with anti-tamper protection and microswitch	**+ 109,50**
Art. + W	Version with internal self-heating on 28800LC	**+ 52,20**
	Use: high security solenoid lock for automatic gates	

02288	**FIXING PLATE FOR GATE LOCK - REPLACEMENT** Flat plate in stainless steel for fixing of solenoid lock item 28800 and 28800LC to the gate. Supplied in ref 28800	**39,10**

02290	**FLOOR STRIKE** Stainless steel striking plate for bolt insertion into the floor. For item 28700 - 28710 - 28720 - 28800 - 28800LC Dimension: mm 120 diameter x 5mm thickness	**55,70**

Double cylinder length without under plate

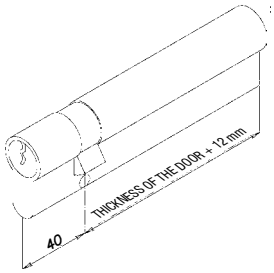

Double cylinder length without under plate and tamper defender item code 02250

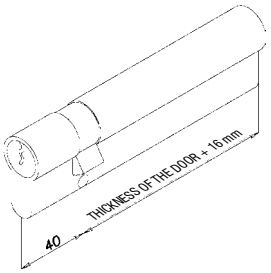

Double cylinder length with under plate

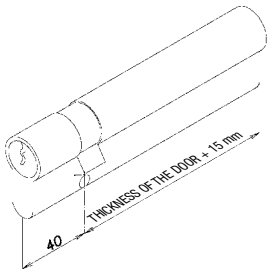

Double cylinder length with under plate and tamper defender item code 02250

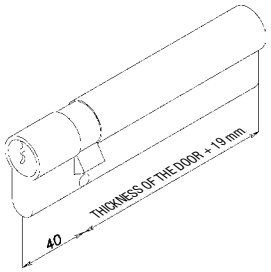

Lenght of the half cyilinder

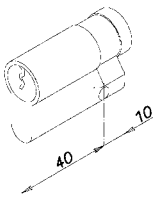

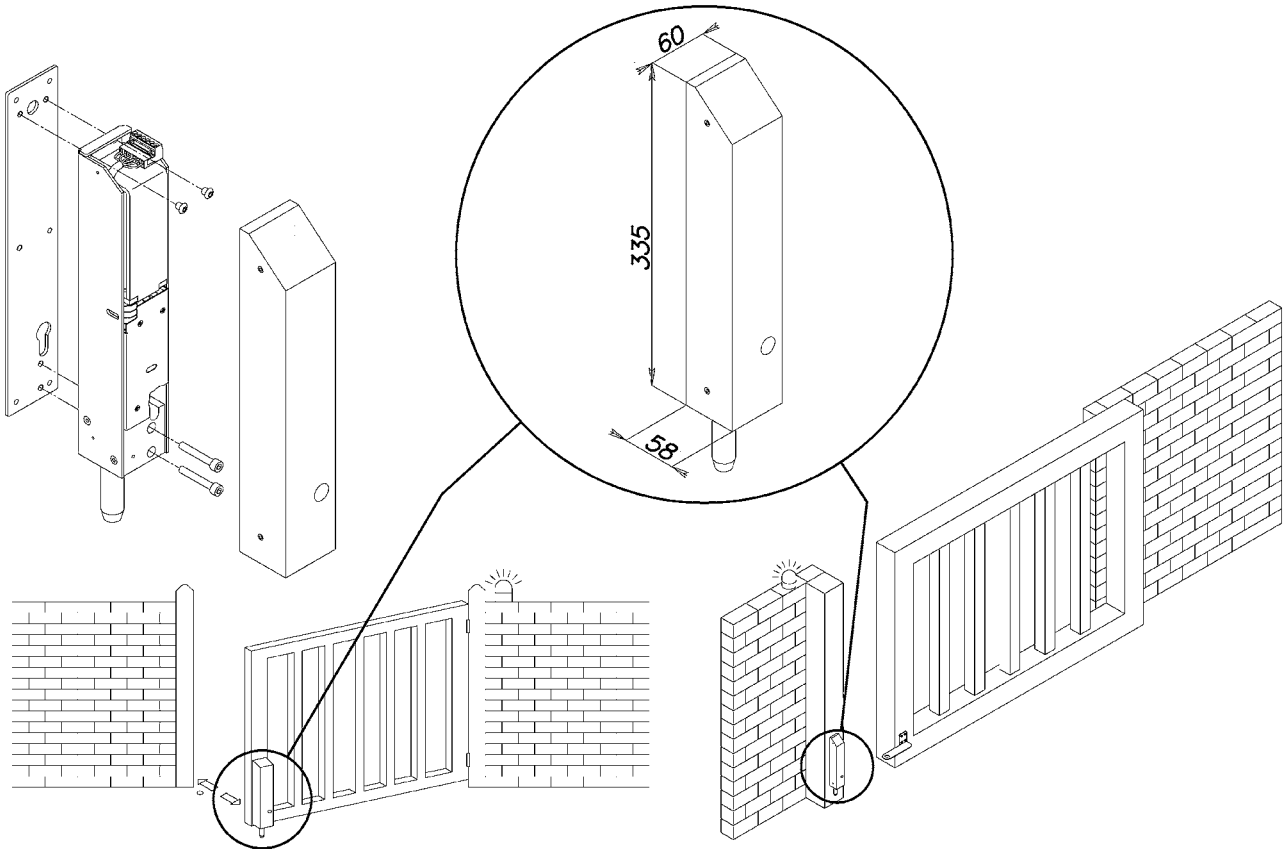

MOUNTING DRAWING

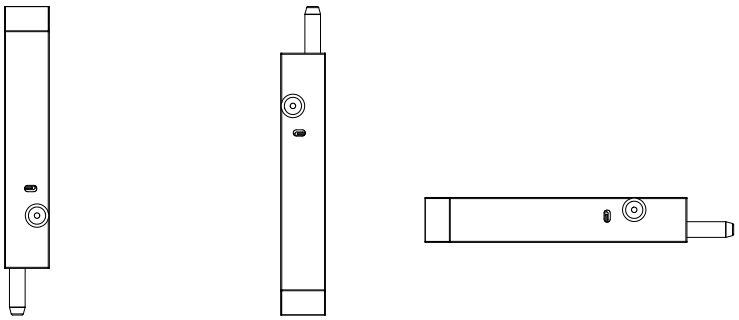

Standard | Not possible | On demand

MAXIMA

- HIGH SECURITY MOTORISED LOCKS
- SWINGING DEADBOLT WITH ANTI CUTTING MECHANICAL BLOCK
- MANUAL ACTIVATION WITH EUROPEAN CYLINDER
- HOOK VERSION FOR SLIDING DOORS
- CONTROL UNIT FOR SINGLE AND INTERLOCKED DOORS

OPERA

MAXIMA

www.opera-italy.com

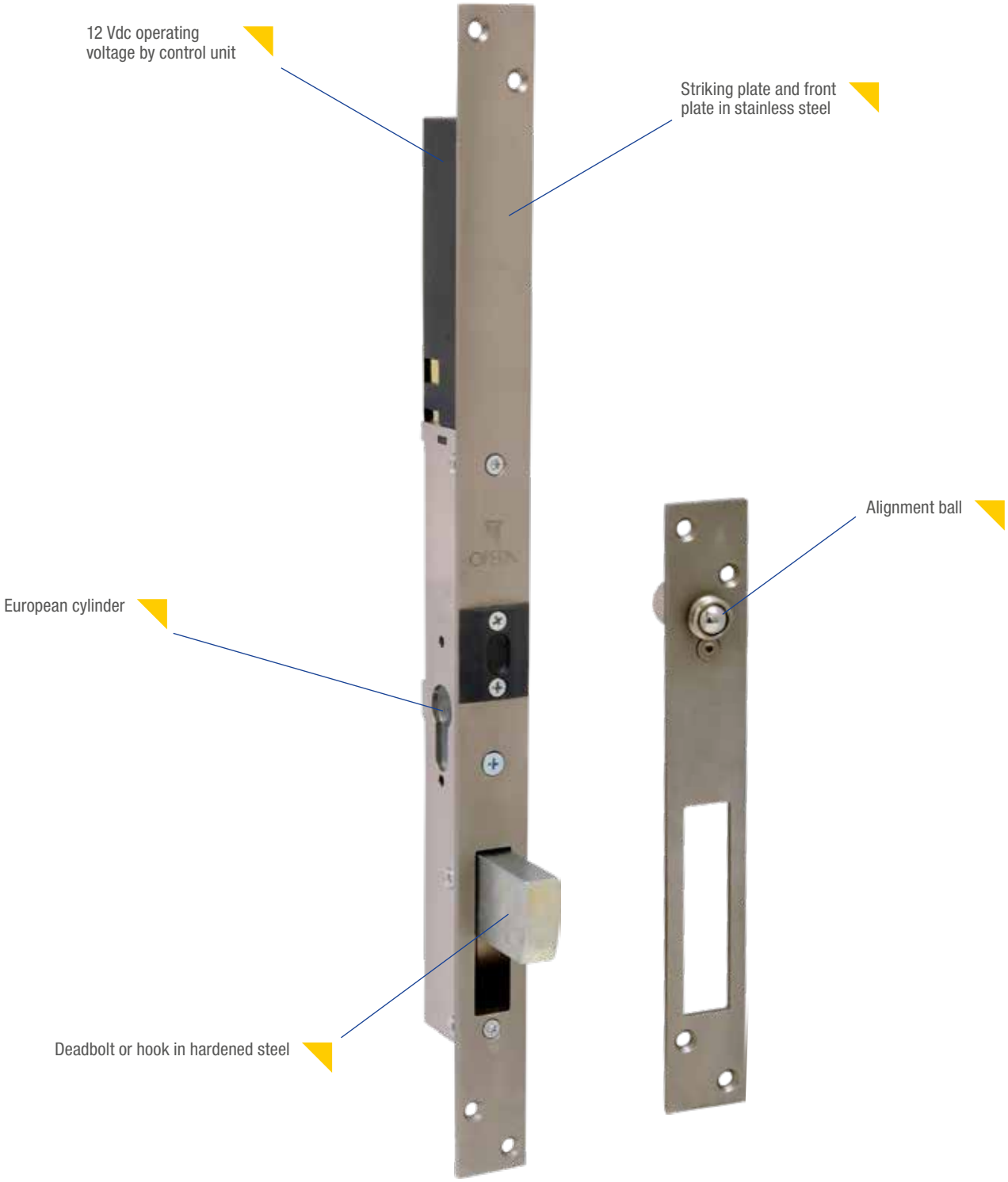

PLUS

- High security motorised lock
- Swinging deadbolt with anti cutting mechanical block in closing position
- Deadbolt hook version for sliding doors
- Quick execution of the opening and closing commands
- High resistance to breaking and entering
- Mechanical opening and closing with European cylinder

INTERNAL OPENING

EXTERNAL OPENING

PLUS EXAMPLE

1 Door jamb solenoid lock for reinforced and metal profiles
2 Single or interlocked doors management
3 Mounting on the frame or the door shutter
4 To be matched with intercom and access control systems

Art.	Description	€
	MOTORISED LOCK Mechanical opening with European type cylinder **(Cylinder with internal knob not usable)** Striking plate in stainless steel (mm): 440 × 30 x 3 Armature plate in stainless steel with anti-rebound ball-catch (stroke adjustable at exit to 15 mm.): 216 x 30 x 3 mm.l Swinging deadbolt in hardened anti-cutting steel (mm) 35 x 14 x extension 40l Lock body dimensions on page 198 Deadbolt mechanical block in closed position Magnetic sensor with N.O. contact for verification of the door position to be inserted on the door frame. Magnet and sensor adjustable in extension up to 25 mm Output cable to the motor unit with rapid plug-in connector Operating voltage: 12 Vdc from control electronics Maximum current consumption 4 A peak with electronic control limiter Maximum activation time: 0.15 seconds Opto-electronic bolt position control	
25500 20	Backset (mm): 20	**772,00**
25500 25	Backset (mm): 25	**772,00**
25500 30	Backset (mm): 30	**772,00**
25500 35	Backset (mm): 35	**772,00**
25500 50	Backset (mm): 50	**772,00**

Use: high security solenoid lock for single hinged doors or interlocking systems. Management by control electronics Art. 54250 and 54255.

	MOTORISED LOCK WITH HOOK DEAD BOLT Mechanical opening with European type cylinder **(Cylinder with internal knob not usable)** Mechanical and electronic characteristics are the same as the previous article except: Swinging hook deadbolt in hardened anti-cutting steel (mm) 35 x 14 x extension 40	
25511 20	Backset (mm): 20	**804,00**
25511 25	Backset (mm): 25	**804,00**
25511 30	Backset (mm): 30	**804,00**
25511 35	Backset (mm): 35	**804,00**
25511 50	Backset (mm): 50	**804,00**

Use: high security solenoid lock for single sliding doors or interlocking systems. Management by control electronics Art. 54250 and 54255

Art.	Description	€
OP55011 50	**MOTORIZED DEADBOLT ELECTRIC LOCK SWING DOOR** **(Replacement for Corni 55011.50 type electric lock)** Mechanical opening with European cylinder **(Cylinder with internal knob not usable)** Front and strike plate in stainless steel with anti-rebound sphere (adjustable outward travel 15 mm) Swinging deadbolt in hardened anti-cut steel block 35 x 14 mm and extension 40 mm Mechanical locking of the deadbolt in the closed position Magnetic sensor with N.C. contact to verify the position of the door leaf to be installed on the door frame. Magnet and sensor adjustable in extension up to 25 mm Output cable from the motor unit with quick-connect connector Power supply: 12 Vdc from management electronics Maximum current absorbed 4 A instantaneously at startup with electronic control limiter Maximum operating time: 0.15 sec. Opto-electronic control of the deadbolt position **Use:** for single or interlocked doors. Management delegated to electronic control units part no. 54250 and 54255 Backset: mm 50	884,00

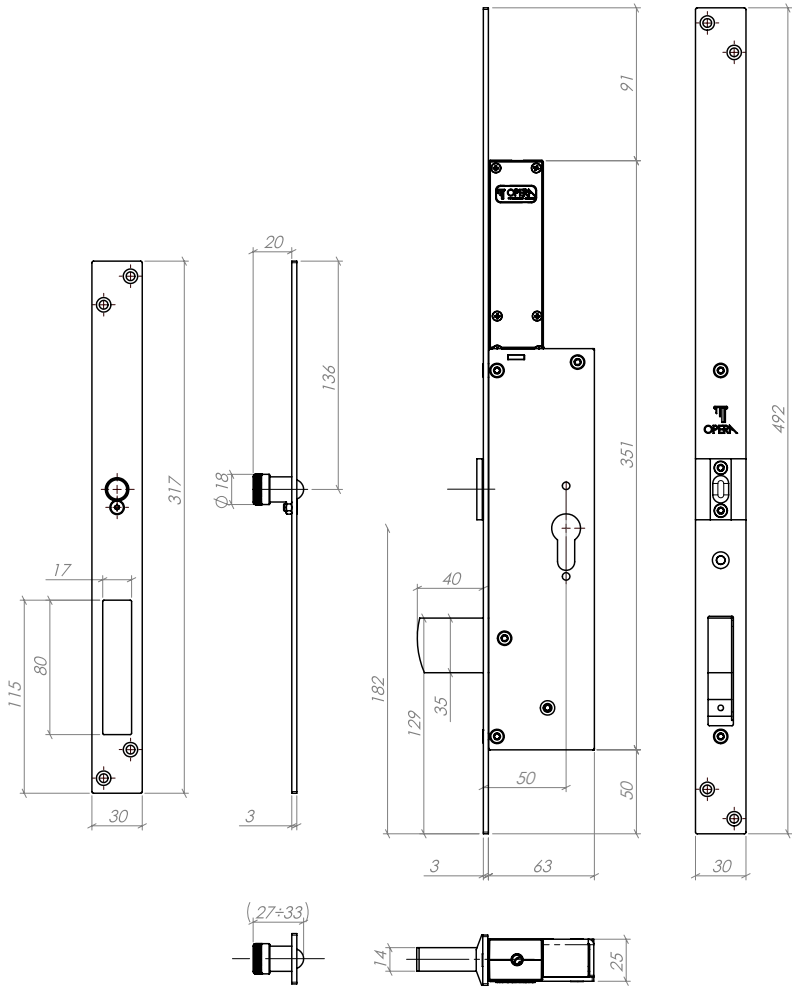

Art.	Description	€
54250	**ELECTRONIC CONTROL UNIT** **For management of one door** Box in grey ABS, dimensions (mm) 240 × 150 × 48 Operating voltage: 10-12 Vac / 65 V.A, 12 Vdc / 3 A Absorbed current: 100 mA in stand-by / 4 A at peak of electromechanical lock Ready for interlocking connection of 2 or more doors Inputs with N.O. contacts for: - Opening - Block or Metal Detector - Emergency - Bolt position (opto-electronic) - Door position Outputs: - Double switching relay C./N.O./N.C for deadbolt status signalling and for - connection to indicator lamps - Fault Alarm Open Collector Contact - Possibility of connection in cascade to interlock several doors with each - other (to be connected one for each door to be controlled) - Automatic relocking after 0.5 seconds (selectable at 1 second) upo - approach of the door - Automatic relocking after 6 seconds (selectable at 13 seconds) if the doo - is not opened - Automatic repetition of the command received if not executed in openin - with 4 consecutive attempts - Automatic repetition of the command received if not executed in closin - with 4 consecutive attempts - Electronic control and protection of non-executed command **Use:** electronic control unit for timed and/or interlocking management of electromechanical locks Maxima series 25500 and 25511	354,50

54255	**ELECTRONIC CONTROL UNIT** **For management of two doors** Box in wall mount ABS, dimensions (mm) 300 x 225 x 130 Operating voltage: 230 Vac (internal transformer) Same electrical and operational characteristics as item 54250 but for management of 2 doors in interlocking configuration **Use:** electronic control unit for timed and/or interlocking management of electromechanical locks Maxima series 25500 and 25511	841,80

Art.	Description	€
04925	**MOTOR UNIT (SPARE PART)** **Use:** spare motor unit for motorised locks article 25500 and 25511	211,00

02250L	**TAMPER DEFENDER** Matt chromium plated body in hardened steel Dimensions (mm): 90 × 30 x 15 Fixing with through bolt holes from the inside of the door Usable with cylinders which protrude up to 4 mm **Use:** tamper defender for security cylinders Can be used with all cylinders mounted on Maxima electromechanical locks	80,60

02255	**ARMATURE PLATE FOR MAXIMA SERIES SOLENOID LOCKS** Armature plate in stainless steel with anti-rebound ball-catch (stroke adjustable at exit to 15) - Dimensions (mm): 216 × 30 × 3	48,60

05426	**MULTI-POLE CABLE** Multi-pole cable 2 x 1 sq mm. + 8 x 0.22 with the same colouring as the cable on the electromechanical lock motor unit Per metre **Use:** cable for systems with electromechanical lock Maxima series 25500 and 25511	9,50

ELECTRONIC CONTROL UNITS FOR MAXIMA MOTOR LOCK

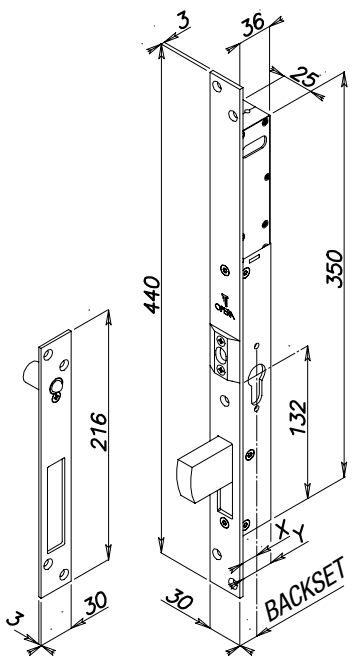

BACKSET	X	Y
E. 20	17	33
E. 25	22	38
E. 30	27	43
E. 35	32	48
E. 50	47	63

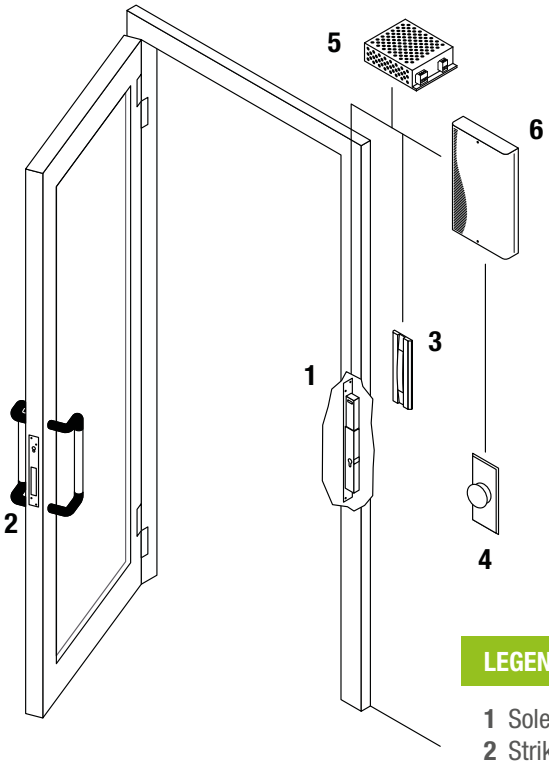

LEGENDA

1 Solenoid lock
2 Striking plate
3 Indicator lamps
4 Button
5 Power supply
6 Control unit

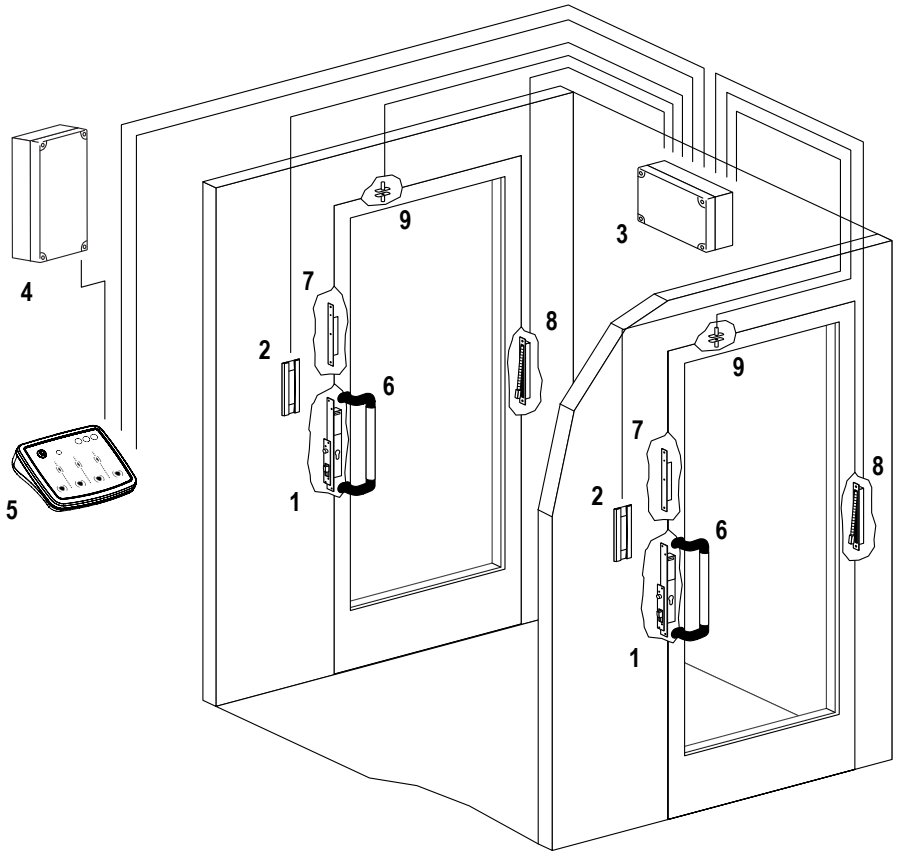

LEGENDA

1 Solenoid locks
2 Indicator lamps
3 Control unit
4 Power supply
5 Desktop console
6 Bars
7 Sensitive cards
8 Lead covers
9 Magnetic sensors

Art.	Description	€
03510	**VERTICAL HANDLE** Vertical handle with elbows in plastic and central tube in silver anodized aluminium 300 mm. (longer lengths available on request) Elbow with 4 through wires ready for connection to sensitive board Art. 53500 **On request:** dark brown, black or painted red, yellow, green tube	151,80
03520	**HORIZONTAL HANDLE** Horizontal handle with elbows in plastic and central tube in silver anodized aluminium 300 mm. (longer lengths available on request) Elbow with 4 through wires ready for connection to sensitive board Art. 53500 **On request:** dark brown, black or painted red, yellow, green tube	151,80
03515	**VERTICAL HANDLE** Vertical handle entirely in black painted aluminium 395 mm. ready for connection to sensitive board Art. 53501 **On request:** painted red or yellow	151,80
03525	**HORIZONTAL HANDLE** Horizontal handle entirely in black painted aluminium 395 mm. ready for connection to sensitive board Art. 53501 **On request:** painted red or yellow	151,80
53500	**SENSITIVE BOARD** Sensitive board with contact plate for insertion inside tube for handles Art. 03510 and 03520 Dimensions (mm): 120 x 15 x 17 Operating voltage: 12 - 24 Vdc Absorbed current: 10 mA in stand-by / 50 mA with relay activated Relay in switching: 2 A @ 24 Vdc / 1 A @ 120 Vac Sensitivity adjustment trimmer. Indicator LED of sensitivity calibration Stable output contact with relay C./N.O./N.C **Note:** the sensitivity board is not suitable for operation with Prima and Classica series solenoid locks.	232,40
53501	**SENSITIVE BOARD WITH FRONT PLATE** Sensitive board ready for connection to handles Art. 03515 and 03525 Same electrical characteristics as Art. 53500 Front plate in anodized aluminium for insertion in the door profile Front plate dimensions (mm): 200 x 25 x 2 Dimensions (mm): 120 x 15 x 17 Hole for sensitivity adjustment trimmer Hole for sensitivity calibration indicator LED **Note:** the sensitivity board is not suitable for operation with Prima and Classica series solenoid locks.	260,80
44000	**PUSH BAR SWITCH (NO LATCH)** Push Bar type with base in steel and horizontal activation bar in silver anodized aluminium Dimensions (mm): 860 (can be shortened up to 550 mm.) x h 60 bar x 68 thickness Mechanical block with bar pressed for the “open” release lever function Micro-switch with C./N.O./N.C contact rated 24 V / 5 A Hand: reversible **Use:** electric command for release of security electromagnets	187,30

PROFILO

- ELEGANT AND INNOVATIVE INDICATOR LAMPS SERIE
- HIGH EFFICIENCY LED LIGHTING
- STANDARD RED / GREEN VERSION AS DOOR STATUS INDICATORS
- WHITE / BLUE VERSION AS LIGHTING SYSTEM OR STEP LIGHT
- REDUCED DIMENSIONS FOR INSERTION ON NARROW DOORS
- EXTERNAL INTERCOM VERSION WITH THE SAME DIMENSIONS

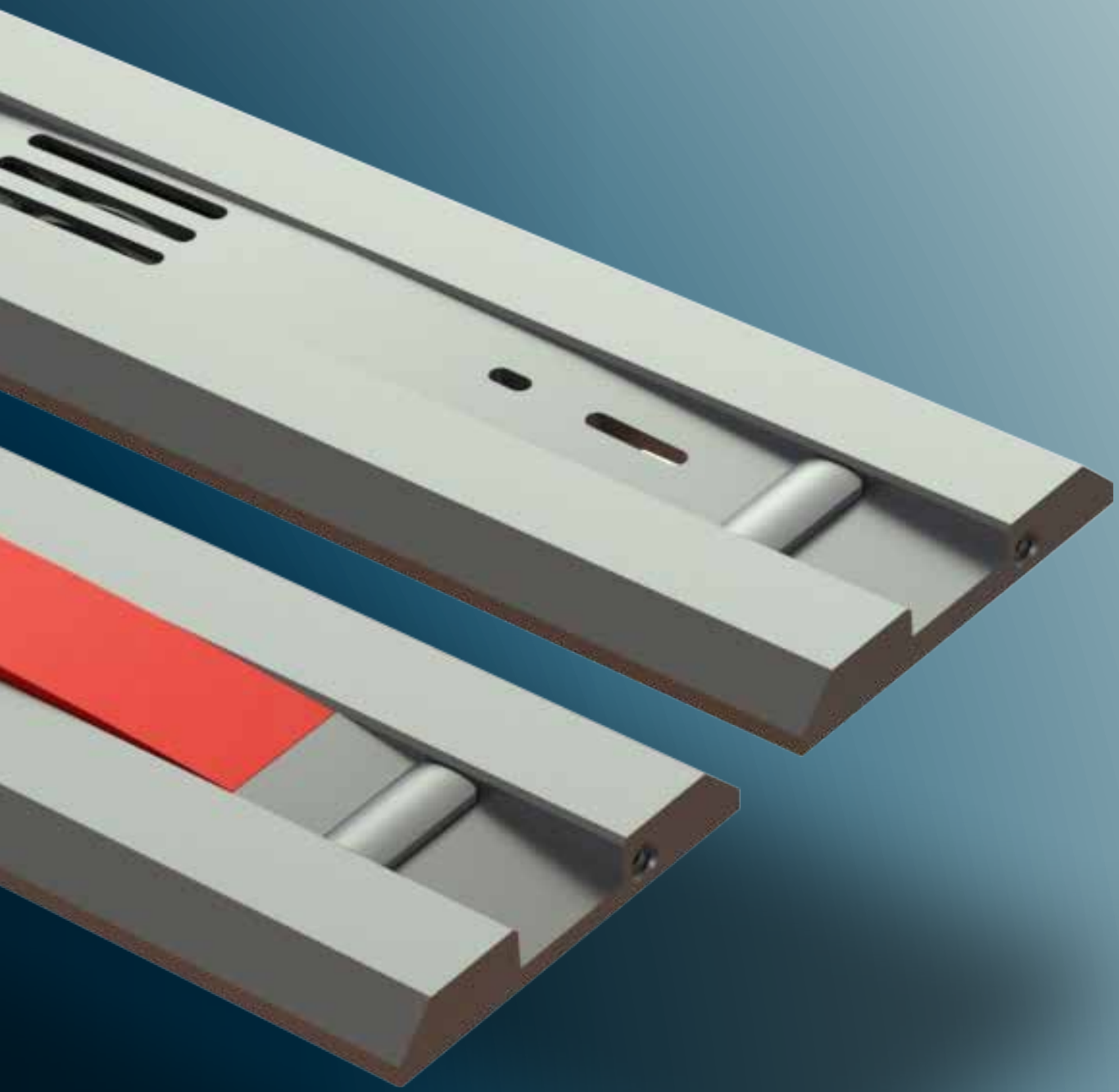

PROFILO

www.opera-italy.com

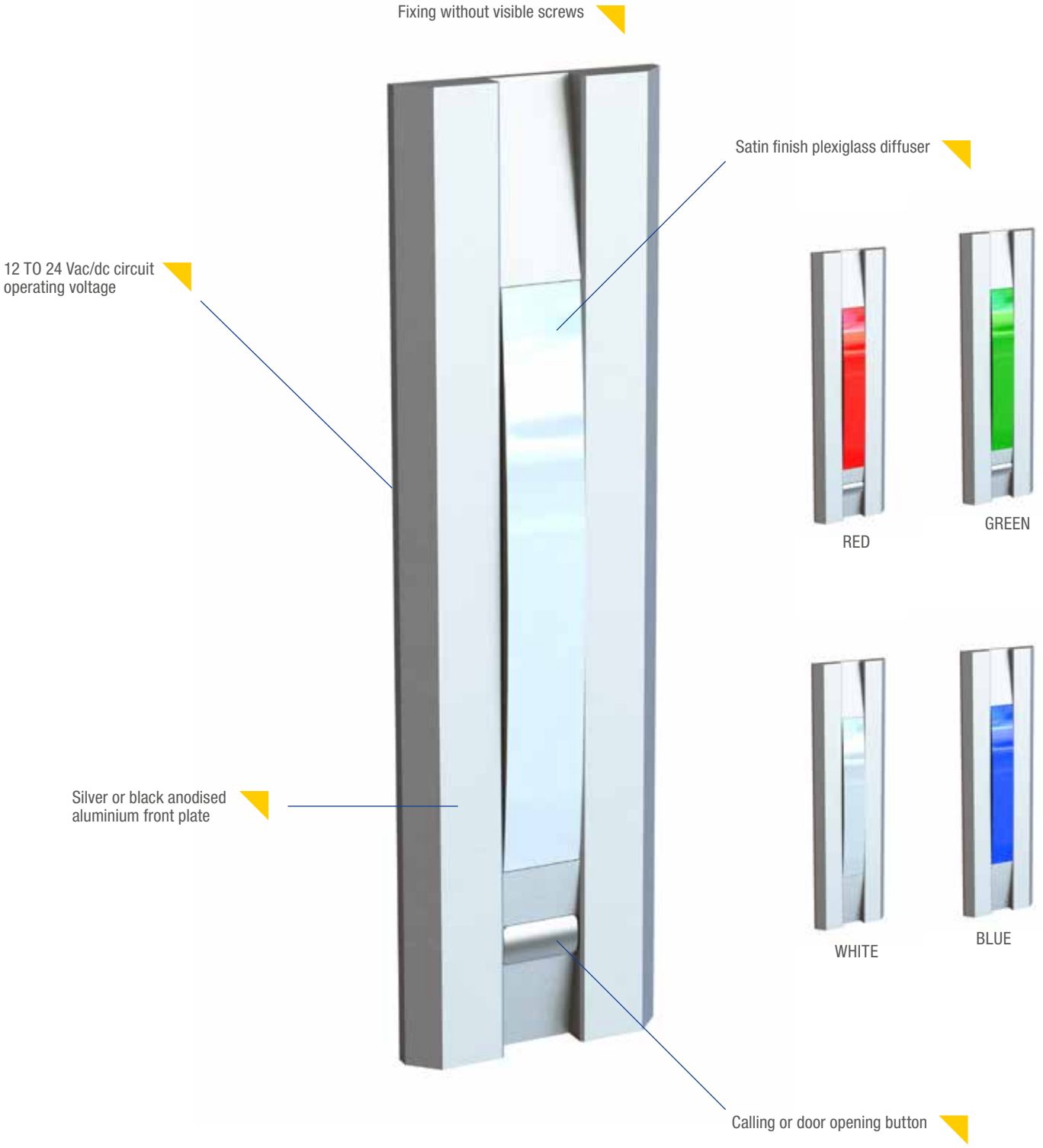

PLUS

- Elegant and innovative indicator lamps serie
- High efficiency LED lighting
- Standard Red / Green version as door status indicators
- White / Blue version as lighting system or step light
- Reduced dimensions for insertion on narrow doors
- External intercom version with the same dimensions

PLUS EXAMPLE

1 Closed door status indicator
2 Open door status indicator
3 Indicator for lighting and step light

WATCH THE VIDEO

Art.	Description	€

RED / GREEN INDICATOR LAMP

Front plate in anodized aluminium
External dimensions (mm) 105 x 40 x 5
Internal circuit dimensions (mm): 80 x 26 x 16
Operating Voltage 12/24 Vac/dc - 60 mA with LED on
Red / green high efficiency LED signalling diameter (mm) 20
Selection jumper for fixed or flashing light
Command for LED selection with N.O. contacts

55010	Silver front plate	**117,40**
55010BR	Bronze front plate	**117,40**
55010N	Black front plate	**117,40**

RED / GREEN INDICATOR LAMP WITH PUSH BUTTON

Front plate in anodized aluminium
External dimensions (mm) 140 x 40 x 5
Internal circuit dimensions (mm): 100 x 26 x 16
Operational and electrical characteristics of the lamp indicator section are the same as article 55010
Opening or call push button with N.O. contact - N.C on demand

55011	Silver front plate	**142,30**
55011BR	Bronze front plate	**142,30**
55011N	Black front plate	**142,30**

RED / GREEN INDICATOR LAMP WITH PUSH BUTTON FOR INTERCOM CALL AND PORTER

Front plate in anodized aluminium
External dimensions (mm) 186 x 40 x 5
Internal circuit dimensions (mm): 162 x 33 x 16
Operational and electrical characteristics of the lamp indicator section are the same as article 55010
Porter intercom:
Operating voltage: 12 Vdc - 10 mA in stand-by / 100 mA in operation
Call push button with blue signalling LED for handset connection
Amplified system with loudspeaker and microphone compatible with standard 5 wires intercom systems
Separate adjustment of loudspeaker and microphone volumes via trimmers

55012	Silver front plate	**198,00**
55012BR	Bronze front plate	**198,00**
55012N	Black front plate	**198,00**

Art.	Description	€
	OUTDOOR PORTER INTERCOM Front plate in anodized aluminium External dimensions (mm) 105 x 40 x 5 Internal circuit dimensions (mm): 80 x 33 x 161 Operating voltage: 12 Vdc - 10 mA in stand-by / 100 mA in operation Call push button with blue signalling LED for handset connection Amplified system with loudspeaker and microphone compatible with standard 5 wires intercom systems Separate adjustment of loudspeaker and microphone volumes via trimmers	
55013	Silver front plate	**142,30**
55013BR	Bronze front plate	**142,30**
55013N	Black front plate	**142,30**

AVAILABLE FINISHES

Silver Bronze Black

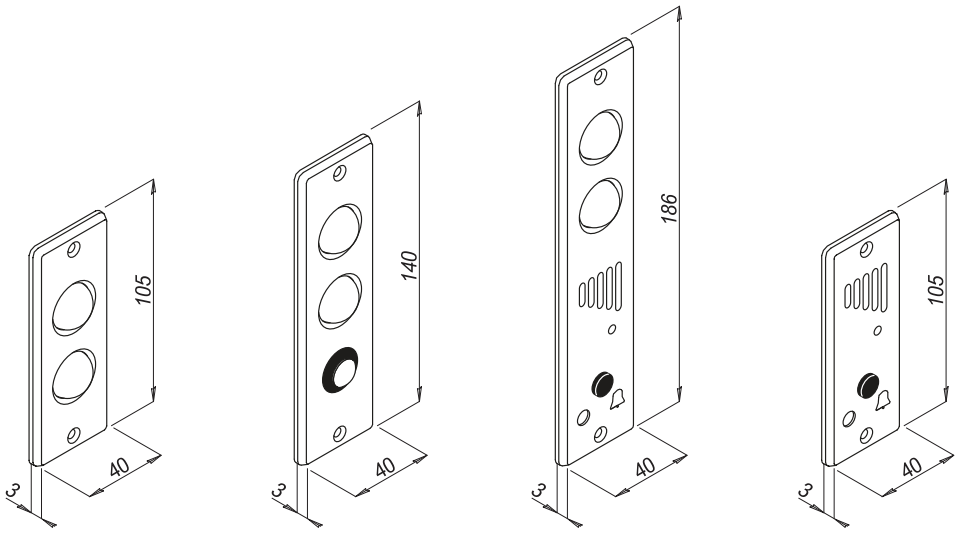

Art. 55010 Art. 55011 Art. 55012 Art. 55013

Art.	Description	€

RED / GREEN INDICATOR LAMP

Front plate in anodized aluminium
External dimensions (mm) 140 x 40 x 6
Internal circuit dimensions (mm): 118 x 46 x 17
Operating Voltage 12/24 Vac/dc - 30 mA with LED on
Red / green high efficiency LED signalling
Selection jumper for fixed or flashing light

55030	Silver front plate	**123,30**
55030BR	Bronze front plate	**123,30**
55030N	Black front plate	**123,30**

On request: White / blue light

RED / GREEN INDICATOR LAMP WITH PUSH BUTTON

Front plate in anodized aluminium
External dimensions (mm) 140 x 40 x 6
Internal circuit dimensions (mm): 118 x 46 x 17
Operating Voltage 12/24 Vac/dc - 30 mA with LED on
Red / green high efficiency LED signalling
Selection jumper for fixed or flashing light
Opening or call push button with N.O. contact

55031	Silver front plate	**149,40**
55031N	Bronze front plate	**149,40**
55031BR	Black front plate	**149,40**

On request: White / blue light

INTERCOM PORTER

Front plate in anodized aluminium
External dimensions (mm) 140 x 40 x 6
Internal circuit dimensions (mm): 118 x 28 x 19
Operating voltage: 12 Vdc - 10 mA in stand-by / 100 mA in operation
Call push button with blue signalling LED for handset connection
Amplified system with loudspeaker and microphone compatible with standard 5 wires intercom systems
Separate adjustment of loudspeaker and microphone volumes via trimmers

		149,40
55033	Silver front plate	**149,40**
55033N	Bronze front plate	**149,40**
55033BR	Black front plate	

Art.	Description	€
OP04500 56	**ALT / AVANTI INDICATOR LAMP** **(interchangeable with the Yale-corni traffic lights)** Front plate in anodized aluminium with black polycarbonate film External dimensions (mm) 195 × 40 x 3,5 Internal circuit dimensions (mm): 135 x 35 x 25 Operating Voltage 12/24 Vac/dc - 25 mA Red / green high efficiency LED Selection jumper for fixed or flashing light Command for LED selection with N.O. contacts	213,40

OP04500 58	**ALT / AVANTI INDICATOR LAMP WITH INTERCOM FACILITIES** **(interchangeable with the Yale-corni traffic lights)** Front plate in anodized aluminium with black polycarbonate film External dimensions (mm) 195 x 40 x 3,5 Internal circuit dimensions (mm): 175 x 35 x 30 Operating Voltage 12/24 Vac/dc - 25 mA Red / green high efficiency LED Selection jumper for fixed or flashing light Command for LED selection with N.O. contacts With loudspeaker and microphone Opening or call push button with N.O. contact To be used with porter 05515 - see page 186	249,00

OP04501 56	**RED / GREEN INDICATOR LAMP** **(interchangeable with the Yale-corni traffic lights)** Front plate in anodized aluminium with black polycarbonate film External dimensions (mm) 160 x 40 x 3,5 Internal circuit dimensions (mm): 100 x 36 x 25 Operating Voltage 12/24 Vac/dc - 25 mA Selection jumper for fixed or flashing light Command for LED selection with N.O. contacts	154,10

OP04501 58	**RED / GREEN INDICATOR LAMP WITH INTERCOM FACILITIES** **(interchangeable with the Yale-corni traffic lights)** Front plate in anodized aluminium with black polycarbonate film External dimensions (mm) 160 x 40 x 3,5 Internal circuit dimensions (mm): 141 x 37 x 30 Operating Voltage 12/24 Vac/dc - 25 mA Selection jumper for fixed or flashing light Command for LED selection with N.O. contacts With loudspeaker and microphone Opening or call push button with N.O. contact To be used with porter 05515 - see page 186	201,60

Art.	Description	€
05512	**ELECTRONIC CONTROL UNIT FOR MULTIPLE INTERCOM CONNECTIONS** Container in white ABS Dimensions (mm): 111 x 72 x 29 Connection with screw terminal bloc to 4 outdoor porter intercoms (item 05515, 55012, 55013, 55014, 55033) Connection with 8 pole plug to 3 indoor multiport intercom handsets (05514) Operating voltage: 12 Vdc - 40 mA in stand-by 200 mA in communication **Use:** the control unit allows 4 outdoor intercom locations and 3 indoor handsets to be managed. The call coming from an outdoor intercom location is signalled on the multiport handsets via an acoustic and visible LED signal. The first handset which is picked up connects to the outdoor calling location, excluding the other two handsets. Further calls during the conversation are signalled on the 3 handsets and placed on hold according to the incoming order of priority.	213,40

05513	**INTERCOM HANDSET** Body in white colour ABS Intercom connection with standard 5 wires system Operating voltage: 12 Vdc from porter intercom Internal call buzzer at 12 Vdc Direct connection to the calling station N.O. push button for release contact function for one electromechanical lock	92,50

05514	**MULTIPORT INTERCOM HANDSET** Body in white colour ABS Connection to multiport central control unit item 05512 via 8 pole connector plug Operating voltage: 12 Vdc from intercom control unit Visible signalling of calls via green LED Internal call buzzer at 12 Vdc Push button for selection function of one of the outdoor intercom stations and for “mute” selection signalled by red LED for buzzer deactivation	341,50

05515	**PORTER INTERCOM** Body in black ABS, external dimensions mm 120 x 56 x 30 Internal circuit dimensions mm 80 x 33 x16 Operating voltage: 12Vdc - 10mA in stand-by / 100 mA in operation Call push button with blue signalling LED for handset connection Amplified system with loudspeaker and microphone compatible with standard 5 wires intercom systems Separate adjustment of loudspeaker and microphone volumes via trimmers **To be used** with indicator lamps ref. OP04500 58 and OP04501 58	124,50

APPLICATION EXAMPLE FOR ONE DOOR

05513

55033

APPLICATION EXAMPLE FOR MULTI DOORS

05514

55033

05514

55033

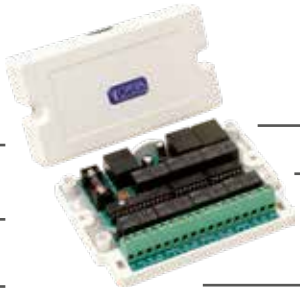

05512

55033

05514

55033

Art.	Description	€
	PUSH BUTTON Front plate in anodized aluminium External dimensions (mm) 105 × 40 x 5 Internal depth dimensions (mm): 23 Release push button with C./N.O./N.C. contact Electrical characteristics: 5A @ 250 Vac - 6 A @ 24 Vdc	
55017	Front plate in silver with " Apriporta " silk screening - red button	**91,30**
55017V	Front plate in silver with " Apriporta " silk screening - green button	**91,30**
55017N	Front plate in black with " Apriporta" silk screening - red button	**91,30**
55017VN	Front plate in black with " Apriporta " silk screening - green button	**91,30**

	ANTI-VANDAL DOOR RELEASE PUSH BUTTON FOR EXIT Front plate in stainless steel External dimensions (mm) 85 × 85 x 2 - British standard Internal depth dimensions (mm): 28 Release push button with C./N.O./N.C. contact Electrical characteristics: 5A @ 250 Vac - 6 A @ 24 Vdc Round push button in stainless steel with green plastic edge	
55020	"Uscita" silk screen in green	**80,60**
55020EX	"Exit" silk screen in green	**80,60**
55020NT	Without writing	**80,60**

55021	**EXIT BUTTON** Front plate in stainless steel External dimensions (mm) 85 x 85 x 2 - British standard Internal depth dimensions (mm): 28 Release push button with C./N.O./N.C. contact Electrical characteristics: 5A @ 250 Vac - 6 A @ 24 Vdc Round button in green plastic Silk screen "Press to Exit" in green colour	**80,60**

Art.	Description	€
01780	**BOX FOR FLUSH MOUNT/APPLICATION MOUNT BUTTON** Body: in silver colour aluminium Dimensions (mm): 85.5 x 85.5 x 38.5 - British standard **Use:** box for flush or application mount for push button item art. 55020 and 55021	31,20

55023	**EXIT BUTTON** Front plate in stainless steel External dimensions (mm) 87 × 37 × 3 Internal depth dimensions (mm): 23 Release push button with C./N.O./N.C. contact Blue LED Status indicator Electrical characteristics: 3A @125 Vac-6 A @ 24 Vdc	90,10

05820P	**TOUCH DOOR OPENER BUTTON** ABS body in black External dimensions: 92 mm x 51 mm x 27 mm Resin-coated electronics - IP65 protection rating Operating temperature: -20 / +50 °C Technology: Capacitive Steel Touch Plate Relay output: 2 A at 24 Vdc / 120 Vac Relay duration: in pulse and lock modes Operating states with red/green LED indicators Auditory signal through buzzer with each touch Connection cable: 50 cm Power supply: 12-24 Vdc / 15-24 Vac Current consumption: 65 mA	110,00

	Art.	Description	€
		MOMENTARY KEY SWITCH FOR EURO-PROFILE CYLINDER Abs body with stainless steel cover plate Dimensions (mm): 110 x 38 x 39 Maintained SPDT micro switch Switch rating: 5A/125VAC Can be used with Euro-profile cylinder dimensions 45 mm. (30 + 10 + 5)	
	55040	Stainless steel cover plate	**39,10**
	55040N	Stainless steel cover plate black painted	**39,10**
		Use: Key switch to activate electric equipment	
		SURFACE MOUNTING BOX S.a.a. Body Dimensions (mm.): 110 x 38 x 46	
	05540	Silver finish	**19,00**
	05540N	Black finish	**19,00**
		Use: Surface or mortice box for art. 55040	
	55041	**MOMENTARY KEY SWITCH FOR ROUND CYLINDER** Brass body Dimensions (mm) : 30 x 17 Release push button with C./N.O./N.C. contact, Switch rating: 5A / 125VAC **Use:** Key switch to activate electric equipment	**87,70**

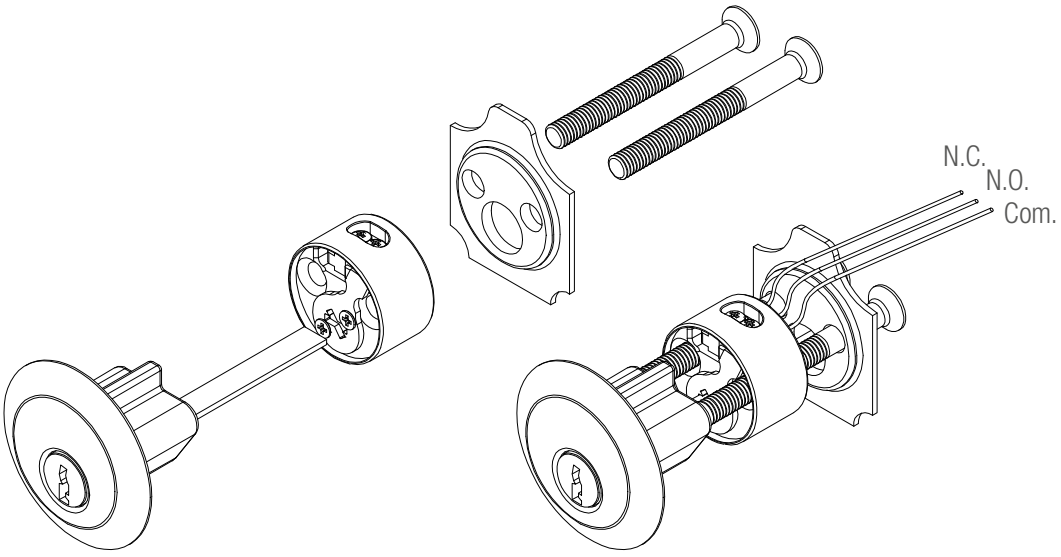

Art.	Description	€

CYLINDER MORTICE CASE WITH MICRO-SWITCH

Front plate in stainless steel mm 160 x 25 x 3
Body in anodized aluminum mm 30 x 17
Output contact C./N.O/N.C - mono stable 5A / 125Vac
Adjustable backset from 20 to 90mm

55042FC	Short front plate for Euro-profile cylinder	**94,80**
55043FC	Short front plate for Italian oval cylinder	**106,70**

Use: Housing for replacement of an existing mechanical mortice lock to cover the mounting holes and permitting triggering of an electronic device by means of a standard Euro-profile cylinder (or Oval cylinder)

Example: It replaces an existing mechanical mortice lock and activate, using the exis ting cylinde r, a magnet ic l ock as 147 series

CYLINDER MORTICE CASE WITH MICRO-SWITCH

Front plate in stainless steel mm 348 x 22 x 3
Body in anodized aluminum mm 30 x 17
Output contact C./N.O/N.C - mono stable 5A / 125Vac
Adjustable backset from 20 to 90mm

55042FL	Long fro nt plat e fo r Euro-p rofile cylinder	**94,80**
55043FL	Long front plate for Italian oval cylinder	**106,70**

Use: Housing for replacement of an existing mechanical mortice lock to cover the mounting holes and permitting triggering of an electronic device by means of a standard Euro-profile cylinder (or Oval cylinder)

Example: It replaces an existing mechanical mortice lock and activate, using the existing cylinder, a magnetic lock as 147 series

WATCH THE VIDEO

EXAMPLE

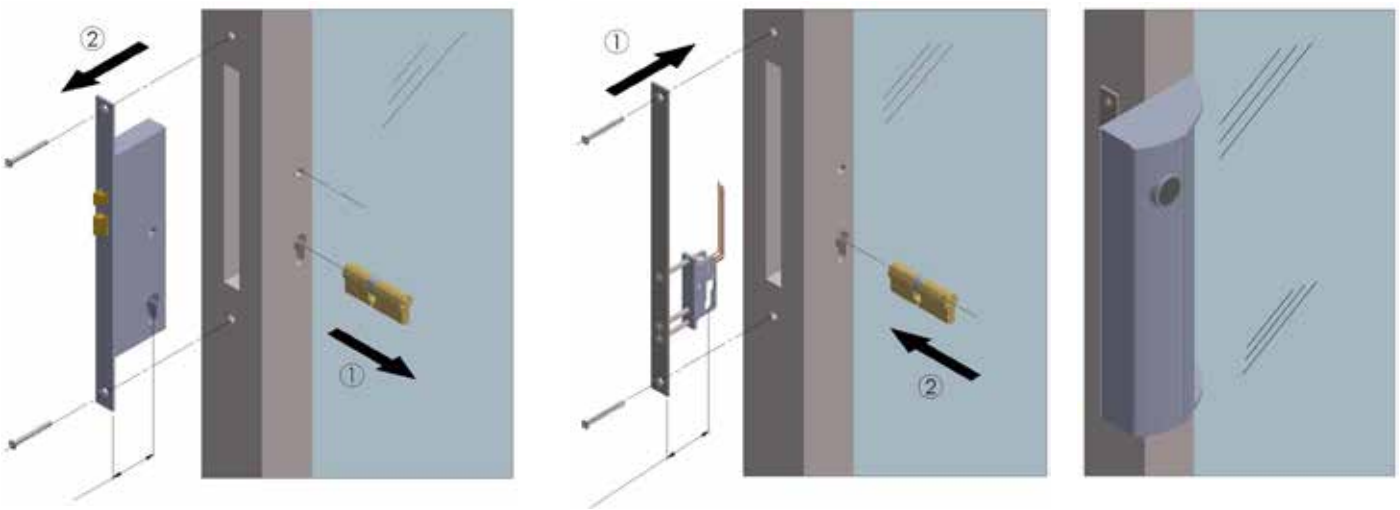

Art.	Description	€
	SURFACE-MOUNT BOXES FOR PROFILED TRAFFIC LIGHT SYSTEM	
	External dimensions: 40 mm x 20 mm x length of traffic light front	
	Box in silver anodized aluminum:	
05501	For item 55010 - 55013 - 55017	**40,70**
05502	For item 55011 - 55613A	**41,90**
05502PD	For item 55030 - 55031 - 55033	**45,10**
05503	For item 55012	**46,80**
	Black electrocolored anodized box:	
05501N	For item 55010N - 55013N - 55017N	**40,70**
05502N	For item 55011N	**41,90**
05502PDN	For item 55030N - 55031N - 55033N	**45,10**
05503N	For item 55012N	**46,80**
	On request:	
Art. + BR	Bronze anodized box (e.g., 55010BR)	**/**

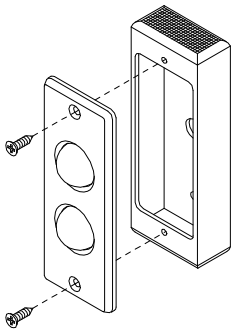

05501

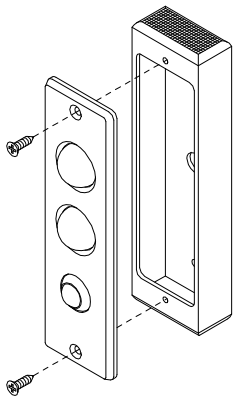

05502

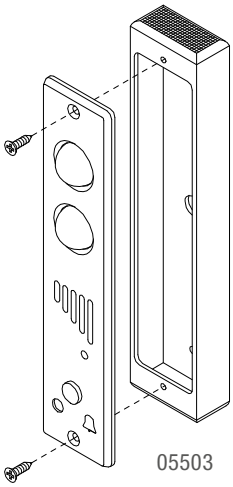

05503

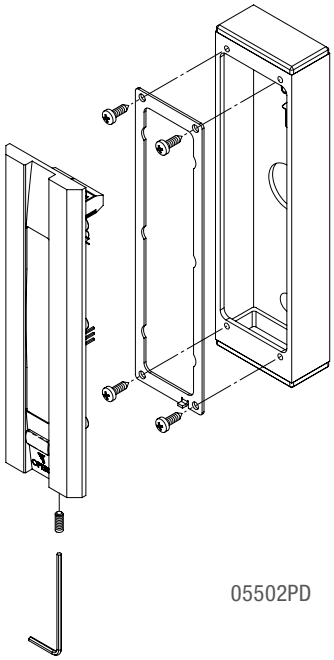

05502PD

Art.	Description	€
05257	**INTERCOM INTERFACE FOR ELECTRIC LOCKS** ABS enclosure dimensions: mm mm 97 x 141 x 22 Input power: 9 - 12 Vac Output: electrically operated lock activation from relay with free contact C/NO/NC timed at 5-10-15-20 s Output fault signalling for intercom button stuck: relay with voltage free contact C/NO. **Use:** allows, in addition to door relay function in installations equipped with electronic locks, to protect the lock if the intercom button is constantly pushed, disabling all command devices and reporting the failure	106,70
05258	**RELAY CIRCUIT FOR INTERCOM OPENING COMMAND** Circuit dimensions (mm): 58 x 15 x 18 Input operating voltage: 9 - 12 Vac/Vdc Output: relay with dry contact C./N.O./N.C **Use:** this circuit allows the 12 Vac contact to be transformed for activation of the traditional electromechanical lock which comes from the intercom system with N.O. dry contact necessary for activation of the solenoid lock opening command. Can be used with all electromagnets in the Safety series, all solenoid locks in the Quadra series (in combination with their control units), the Prima series, Classica, Maxima series (combined with their control units)	48,60
	MAGNETIC SENSOR CONTACT CIRCUIT ABS box dimensions: 102 mm x 50 mm x 27.5 mm Input power supply: 12 or 24 Vdc Output: relay with clean C./N.A./N.C. contact Relay contact current: 10 A - 28 Vdc/120 Vac **Application:** This circuit allows transforming the N.A. contact of the magnetic sensor into a clean N.A. relay contact necessary to activate a signal.	
05259-12	Power supply at 12 Vdc	26,10
05259-24	Power supply at 24 Vdc	26,10
	Compatible with all electro-pistons of the Quadra, Prima, Classica, Maxima series, or with magnetic sensors art. 02221 and 02223	
05260	**TIMING CIRCUIT FOR AUTOMATIC DOORS** Circuit dimensions (mm): 71 x 48 x 16 Box in ABS dimensions (mm) 120 × 56 × 30 Input operating voltage: 12/24 Vac/Vdc Output: relay with dry contact C./N.O./N.C Activation delay timing relay adjustment from 0 to 60 seconds Activation timing relay adjustment from 0 to 60 seconds **Use:** this circuit allows a security electromechanical lock from the **Quadra, Prima, Classica, Maxima series** to be used with motorisation of door opening. Confirmation of latch opening on the electromechanical lock generates, after a pre-established time, activation of a pulse contact on the relay for opening of the motorisation	93,70
	SERVICE RELAY	
REL12V	Relay with polarized activation coil at 12 Vdc / 90 mA Double changeover C./N.A./N.C. - Contact rating 10 A at 250 Vac	42,70
REL24V	Relay with polarized activation coil at 24 Vdc / 50 mA Double changeover C./N.A./N.C. - Contact rating 10 A at 250 Vac	42,70

Art.	Description	€
02221	**MAGNETIC SENSOR FOR MORTICE FIXING** Magnetic door alignment verification sensor Body in threaded brass Brackets in black ABS Dimensions of the bracket (mm): 50 x 20 x 3 Internal depth dimension (mm): 28 Magnet and sensor adjustable in extension 2 wires connection N.O. output contact (N.C. with magnet) Maximum rating: 200 Vdc / 500 mA (10 VA max) on resistive load Operating temperature: -5/+ 50 °C Operating range: 12 mm.	67,60
02223	**MAGNETIC SENSOR FOR SURFACE FIXING** Magnetic door alignment verification sensor Support for surface fixing in white plastic container Dimensions of the bracket (mm): 60 x 16 x 5 2 wires connection N.O. output contact (N.C. with magnet) Maximum rating: 200 Vdc / 500 mA (10 VA max) on resistive load Operating temperature: +5/+40 °C Operating range: 40 mm.	23,70
02225	**DOOR MECHANICAL SENSOR** Mechanical contact for door status signalling Body dimensions (mm): 28 x diameter 20 Front plate in stainless steel (mm) 42 x 23 x 3 Body in oxidised aluminium - anodic build-up oxidation Ball in hardened steel Ball body adjustment of 10 mm. C. / N.O. / N.C. output contact Maximum rating: 1.5 A - 250 V Supplied with 15 cm of three wire cable	43,90
08700	**ANTI-REBOUND BALL-CATCH** Ball with spring adjustment for insertion on swing doors. Body in nickel plated steel Ball front plate and strike in stainless steel Front plate dimensions (mm): 55 x 25 x 3 Depth of the ball body (mm): 30 **Use:** anti-rebound system for swing doors with electronic locks with relocking via alignment sensor. Ideal for heavy doors where realignment is made difficult by excessive rebounds of the door during approach which may prejudice the proper operation of the electromechanical lock.	42,70

	Art.	Description	€
		CONCEALED CABLE COVER Flexible spring in chromium plated steel with internal diameter of 10 mm.	
	08600	Box for insertion into the door profile in chromium plated steel	40,30
	08600XL	Box for mortice fixing dimensions (mm): 260 x 24 x 16	52,00
		Use: concealed cable cover for direct passage of the wires between the door and the frame.	
	08601	**DOOR LOOP WITH CABLES AND PLUG-IN CONNECTORS** Flexible spring steel with internal diameter of 10 mm Box for mortice fixing dimensions (mm): 260 x 24 x 16 Supplied with 2 cables 1Mt long and 4,5 mt on the other side - 8 poles plug-in connector. 8 wires 0,22mm diameter The 08601 door loop, mounted in the hinge of the door, is completely hidden when the door is in the closed position	62,80
	08605	**CONCEALED CABLE COVER** Flexible spring in chromium plated steel with internal diameter of 11 mm. Front plate in black painted steel. Tube length (mm) 88 **Use:** concealed cable cover for direct passage of the wires between the door and the frame	30,80
	08608	**CABLE COVER ONLY FLEXIBLE** Flexible spring in chromium plated steel with external diameter of 9,5mm and internal diameter mm 7. Length (mm) 214 **Use:** external cable cover for direct passage of the wires between the door and the frame	58,10
		CABLE COVER ONLY FLEXIBLE Flexible spring in chromium plated steel with external diameter mm 14 and internal diameter of 10 mm.	
	08610	Length (mm) 250	34,90
	08619	Length (mm) 420	39,80
	08620	Length (mm) 600	39,80
		Use: external cable cover for direct passage of the wires between the door and the frame	
	08630A	**CABLE COVER ONLY FLEXIBLE** Flexible spring in chromium plated steel with fixing metal terminals Terminal dimension (mm): 35 x 30 x 13. Internal diameter (mm) 8 Length (mm) 430 **Use:** external cable cover for direct passage of the wires between the door and the frame	29,60
		CABLE COVER ONLY FLEXIBLE Flexible spring in chromium plated steel with fixing terminals in aluminium alloy Terminal dimension (mm): 47 x 39 x 22. Internal diameter (mm) 8	
	08640	Length (mm) 500	41,50
	08641	Length (mm) 710	46,20
		Use: external cable cover for direct passage of the wires between the door and the frame	
	08650	**TAPPET CONTACTS - ELECTRIC CONTACT** Pair of pressure tappet contacts for electric lock (not electronic lock or solenoid bolt) Voltage: 12/24 Vac/dc - Max current: 5A Front plate in black plastic, dimensions mm 47 × 16 × 4	13,00

Art.	Description	€
	BOX FOR PUSH BUTTON ALARM ACTIVATION WITH MANUAL RESET Container in ABS Dimensions (mm): 99 x 95 × 43 C./ N.O (N.C. on demand) internal switching contact Manual rearming of the contact IP rating: IP41 Transparent Plexiglas cover for protection of the box's activation push button	
05110G	Yellow box	29,90
05110R	Red box (for fire detection systems)	29,90
05110V	Green box (for escpae doors systems)	29,90
	Use: pressing the plastic front plate activates switching of the electrical contact Compliance: EN54-11 (05110R)	
05210	 **TRANSFORMER FOR MAXIMA SERIES MOTORISED LOCKS** Dimensions (mm): 110 x 75 x 68 Primary operating voltage: 230 Vac - 50/60 Hz. Secondary operating voltage: 10 Vac Power: 65 V.A. - Isolation class: II Carter in self-extinguishing plastic material Terminal block with screw connectionse **Use:** power transformer to alternating current for electronic command unit Art. 54250 (spare for Art. 54255) Maxima series	56,90
05211	 **TRANSFORMER FOR OMNIA SERIES ELECTRIC STRIKES** Dimensions (mm): 70 x 58 x 40 Primary operating voltage: 230 Vac - 50/60 Hz. Secondary operating voltage: 12 Vac Power: 10 V.A. - Isolation class: II Carter in self-extinguishing plastic material Terminal block with screw connections **Use:** power transformer to alternating current for Omnia series electric strikes	39,80
05301C	 **WEEKLY PROGRAMMABLE TIMER WITH CALENDAR** 230 Vac power Output: switching relay with C./N.O./N.C contacts Relay rating: 250 Vac / 16 A - 12 Vdc / 4 A Internal lithium battery with charge reserve for 5 years without power Preset date and time Automatic switch for daylight savings time Weekly and daily programming Time programming by hour and minutes Programming key and saving of memorised data **Use:** weekly timer for automatic opening and relocking of electromechanical locks according to preset times. For use with electromagnets, electric strikes in continuous current and solenoid locks.	298,80
05310	 **POWER SUPPLY WITH TIME DELAY** Grey ABS Box Dimensions: 129 (L) x 73 (W) x 50 (D) mm Input Power: 100-240 Vac, 50/60 Hz Output voltage 1: 1.5A/12 Vac (Timer) (for both fail safe and fail secure electric locks) Output voltage 2: 1A/12 VDC Adjustable time: 0 ~ 45 seconds Weight: 0.22 kg N.O.input for push button	142,30

Art.	Description	€

SWITCHING POWER SUPPLY FOR BACKUP BATTERY

Wall mount container in inspectable grey ABS
Dimensions (mm): 300 x 225 x 130 (mm 395 x 310 x 130 for item 05326A)
Regulated power supply with switching technology
Input in alternating current: 230 Vac
Output for battery charging with control circuit for charge voltage
Overload protection Short circuit protection

Output :

05312A	12 Vdc (13,8 Vdc) / 3 A	**280,40**
05325A	24 Vdc (27,6 Vdc) / 3 A	**296,40**
05326A	24 Vdc (27,6 Vdc) / 10 A	**307,80**

SWITCHING POWER SUPPLY

Container in metal with ventilation holes
Regulated power supply with switching technology
Input in alternating current: 230 Vac
Output for battery charging with control circuit for charge voltage
Overload and short circuit protection

Output:

05320A	12 Vdc (13,8 Vdc) / 3.0 A - dimension mm 130 x 99 x 38	**153,90**
05320XM	12 Vdc (13,8 Vdc) / 16 A - dimension mm 194 x 55 x 25	**183,50**
05330XS	24 Vdc (27,6 Vdc) / 1,1 A - dimension mm 91 x 52 x 29	**159,60**
05331A	24 Vdc (27,6 Vdc) / 3 A - dimension mm 159 x 99 x 38	**169,90**
05332A	24 Vdc (27,6 Vdc) / 10 A - dimension mm 215 x 115 x 50	**183,50**

SWITCHING POWER SUPPLY

Abs container for Din rail
230 Vac - 24 Vdc / 1 A Power Supply
Dimensions: 130 x 99 x 38

05320BD	230 Vac - 12 Vdc / 1,5 A Power Supply	**153,90**
05330BD	230 Vac - 24 Vdc / 630 mA Power Supply	**153,90**

BATTERIES

12 Vdc rechargeable lead batteries

00112	Power: 1.2 Ah for Art. 52002 (mm 97 x 42 x 53)	**43,90**
00212	Power: 2.2 Ah (mm 177 x 60 x 35)	**47,90**
00712	Power: 7 Ah (mm 151 x 94 x 65)	**57,60**

05346A

PLUG IN POWER SUPPLY

11,00

Power: 100 - 240 Vac / 12Vdc - 2A
Power supply for console 54614B

Art.	Description	€
55414	**FOUR CHANNEL RECEIVER** Container in grey or black ABS Container size: 200 x 75 x 40 Circuit dimensions (mm): 58 x 58 Operating voltage: 12/24 Vac/Vdc Current: 50 mA max with relays active Frequency 433.92 MHz Programmable codes: 199 different codes with standard 12-64 bit or Rolling Code Output: via C./N.A relay contacts in pulse, bistable or timed bistable mode 1 C./N.O./N.C switching relay with 5A rating 171 C./N.O contact relays with 1A rating Range: 50/80 metres with wire antenna supplied in the package Features: four channel self learning receiver for management of four separate opening commands (example: separate opening of the two doors in any interlocking system and two single doors)	106,70
55416	**TWO CHANNEL RECEIVER** Container in grey or black ABS Container size: 200 x 75 x 40 Circuit dimensions (mm): 58 x 58 Operating voltage: 12/24 Vac/Vdc Current: 50 mA max with relays active Frequency 433.92 MHz Programmable codes: 199 different codes with standard 12-64 bit or Rolling Code Output: via C./N.A relay contacts in pulse, bistable or timed bistable mode 1 C./N.O./N.C switching relay with 1A rating 1 C./N.O contact relays with 1A rating Rating: 50/80 metres with wire antenna supplied in the package Features: two channel self learning receiver for two separate opening commands (example: separate opening of the two doors in any interlocking system)	97,20
55417	**SINGLE CHANNEL MINI RECEIVER** Container in black ABS Container size: 70 x 46 x 21 Circuit dimensions (mm): 47 x 26 Operating voltage: 12/24 Vac/Vdc Current: 50 mA max with relay active Frequency 433.92 MHz Programmable codes: 23 different codes or Rolling Code Output: via C./N.A relay contacts in stable or bistable mode Rating: 50/80 metres with wire antenna supplied in the package Features: single channel self learning receiver for opening command of a door	84,70
55418	**SINGLE CHANNEL MINI RECEIVER** Container in black ABS Container size: 77 x 37 x 21 Circuit dimensions (mm): 47 x 26 Operating voltage: 12/24 Vac/Vdc Current: 50 mA max with relay active Frequency 433.92 MHz Programmable codes: 23 different fixed codes or Rolling Code Output: via C./N.A relay contacts in stable or bistable mode Rating: 50/80 metres with wire antenna supplied in the package Features: single channel receiver for opening command of a door **Use:** allows remote control in an extremely simple way of any electromechanical lock without the aid of an ulterior supplementary power supply. For this reason it can also be applied to any already installed electromechanical lock.	84,70

Art.	Description	€

TWO CHANNEL REMOTE CONTROL

Body in silver and black polycarbonate
Dimensions (mm): 53 x 26 x 14
Red indicator LED for pressing of the buttons
Operating voltage: 6 V alkaline battery type 11A
Frequency 433.92 MHz
Programming: self learning and auto generating of the codes

55420	Standard encoding up to 96 bit	**49,80**
55420RC	Rolling Code Encodinge	**56,90**

Features: remote control with two separate channels, ideal to operate individually on the opening commands of two different doors

Use: for use with all 554 series receivers

FOUR CHANNEL REMOTE CONTROL

Body in polycarbonate
Dimensions (mm): 63 x 36 x 14
Red indicator LED for pressing of the buttons
Operating voltage: 6 V alkaline battery type 11A
Frequency 433.92 MHz
Programming: self learning and auto generating of the codes

55421	Standard encryption up to 96 bit	**54,50**
55421RC	Rolling Code Encoding	**61,70**

Features: remote control with four separate channels, ideal to operate individually on the opening commands of four different doors

Use: for use with all 554 series receivers

REMOTE CONTROL - APPLICATION EXAMPLE
Single channel mini receiver 55418 for electric locks

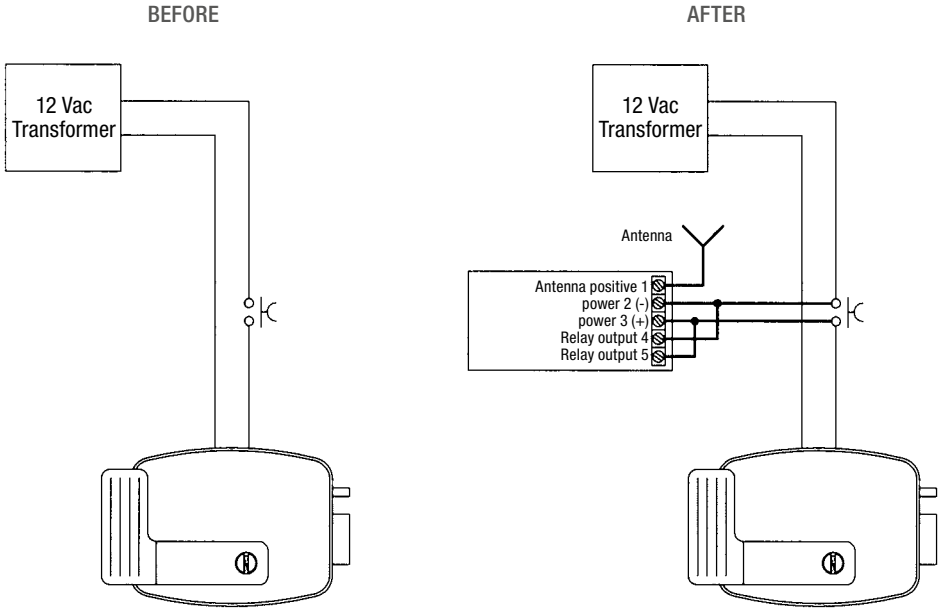

Art.	Description	€

NEW

57520RF

Lo.Ra. RADIO TRANSMITTER MODULE — 119,60

Black ABS box, dimensions: 67 x 50 x 20 mm
Power supply: 12-18 Vac - 12-24 Vdc
Operating temperature: -20 / +70°C
Bicolor red/green LEDs for displaying operational statuses
Radio frequency: 868 MHz using Lo.Ra. technology
Average operating range: 1,000 meters
Inputs: 4 with Normally Open (N.A.) contacts
Radio communication encryption security
Operation: The 57520RF device is a transmitter capable of ensuring long-distance communication, high immunity to interference, high sensitivity, and reduced energy consumption. The transmitter must be paired with the Art. 57521RF receiver, which provides outputs to activate remote loads, offering users multiple solutions; ideal for long-distance activation and control applications.

NEW

57521RF

Lo.Ra. RADIO RECEIVER MODULE — 166,90

Black ABS box, dimensions: 67 x 50 x 20 mm
Power supply: 12-18 Vac - 12-24 Vdc
Operating temperature: -20 / +70°C
Bicolor red/green LEDs for displaying operational statuses
Internal LED and dip switch for selecting relay contact mode: impulse, timed, or bistable.
Radio frequency: 868 MHz using Lo.Ra. technology
Average operating range: 1,000 meters
Outputs: 4 Normally Open (N.A.) contacts from electronic relay (max 400 mA @ 60Vdc)
Operation: The 57521RF device is a receiver capable of ensuring long-distance communication, high immunity to interference, high sensitivity, and reduced energy consumption. The receiver, paired with the transmitter Article 57520RF, allows for the activation of the corresponding OUT 1-4 outputs and the control of remote loads, offering users multiple solutions; ideal for long-distance activation and control applications.

APPLICATION SAMPLE
1 Transmitter module - 4 Receiver module

TX1

RANGE: 1 KM

RX1

RX2

RX3

RX4

APPLICATION SAMPLE
1 Receiver module - 4 Transmitter module

RX1

RANGE: 1 KM

TX1

TX2

TX3

TX4

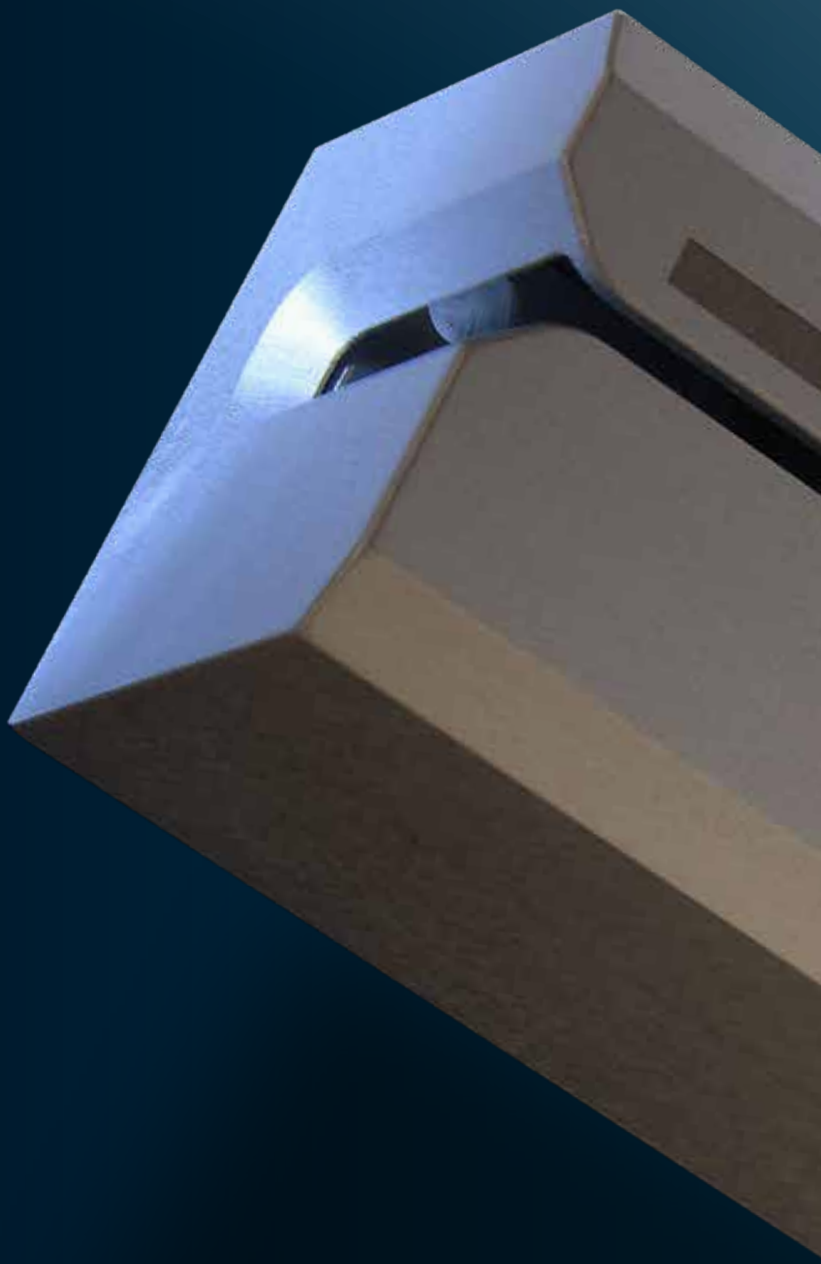

ACCESS

- ACCESS CONTROL SYSTEM
- CODE KEY PAD, MAGNETIC CARDS READER AND RFID
- PEOPLE COUNTER SYSTEM FOR LIBRARIES, MUSEUMS, SHOPPING CENTERS
- STAND-ALONE VERSION FOR INDIVIDUAL APPLICATIONS
- ON LINE VERSION WITH PC MANAGEMENT FOR MULTI DOORS SYSTEMS

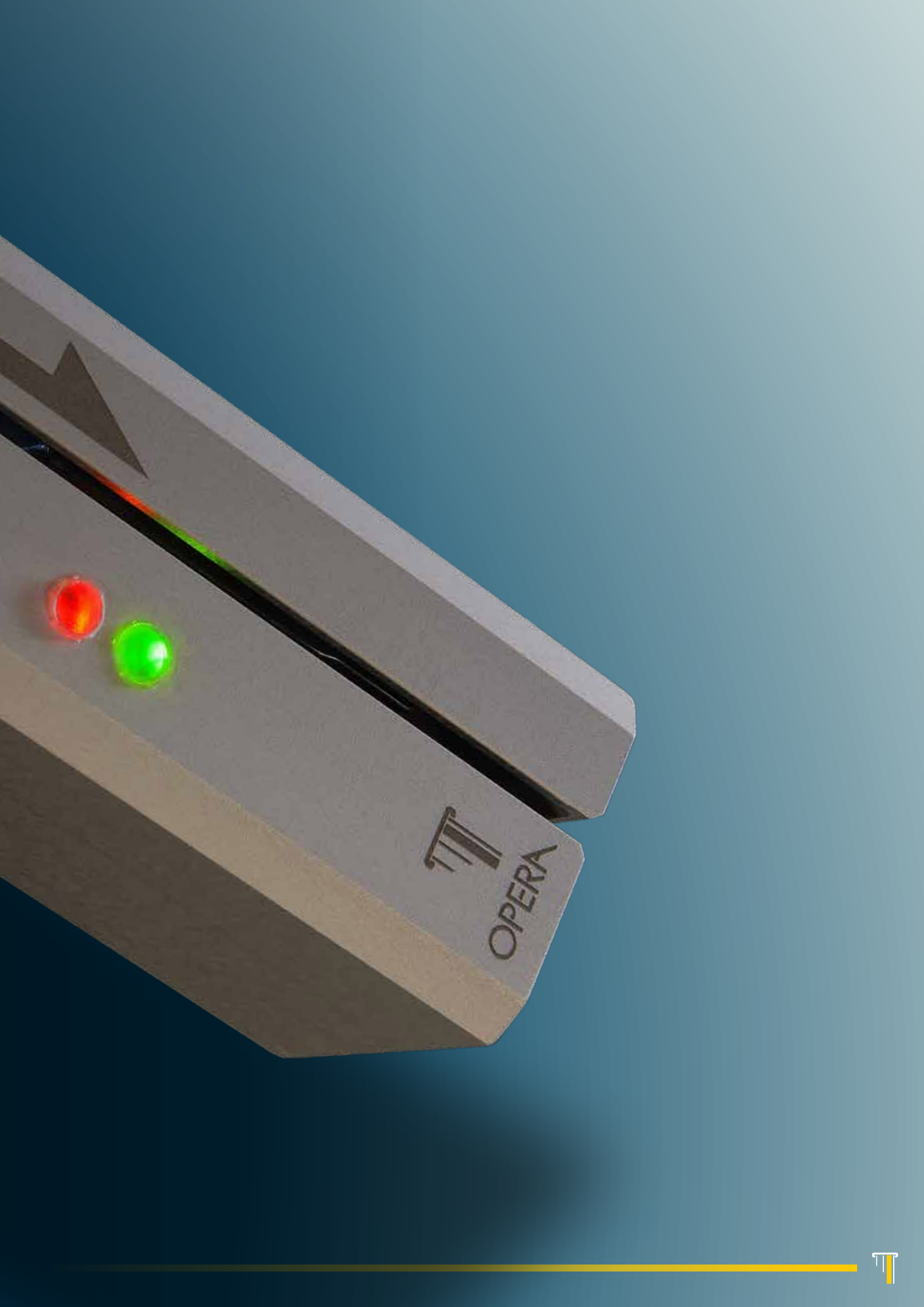
OPERA

PLUS

- Independent or connectable to a PC control unit
- Users configuration from the control unit or the PC
- Usb port for direct events download on Usb key
- 2 remote reading devices operating on the same door (readers/key pads)
- Fixing on DIN bar switchboard

TYPICAL APPLICATION WITH PC OPERATING SYSTEM

SERIAL CONFIGURATION RS-485

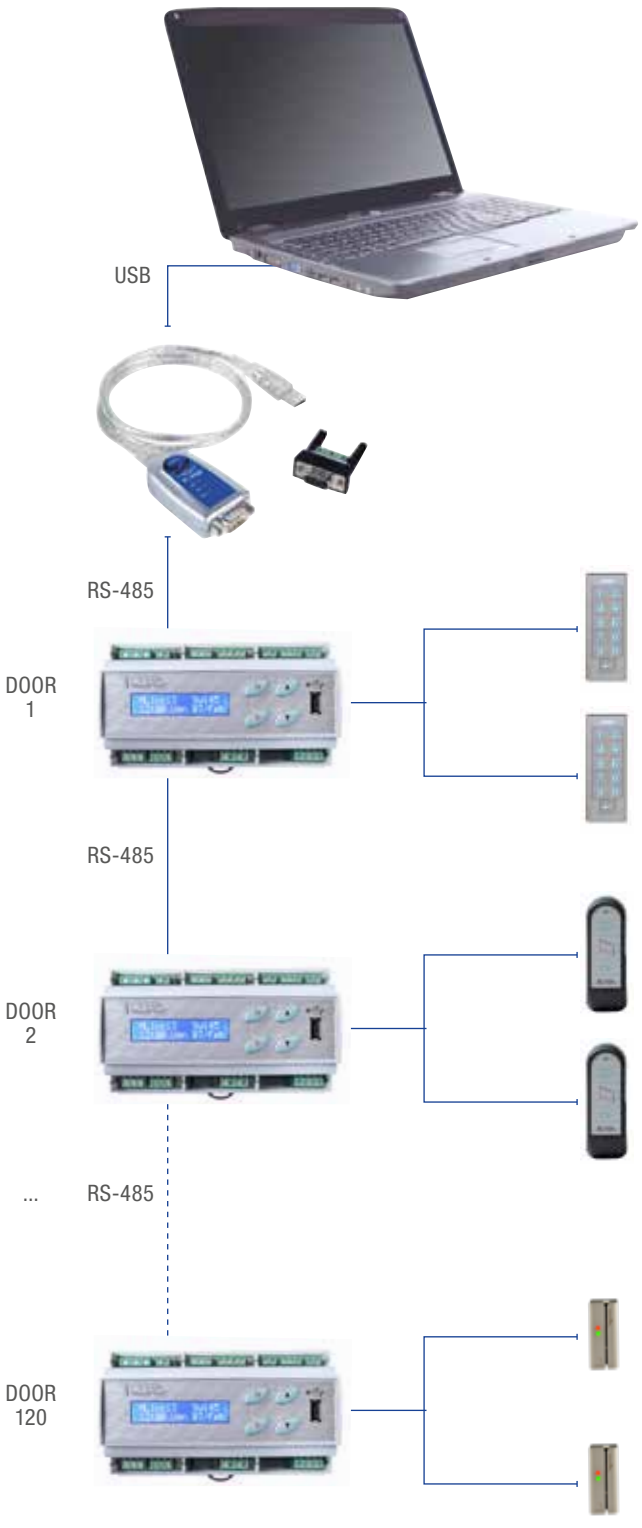

SERIAL CONFIGURATION RS-485 / LAN - WiFi

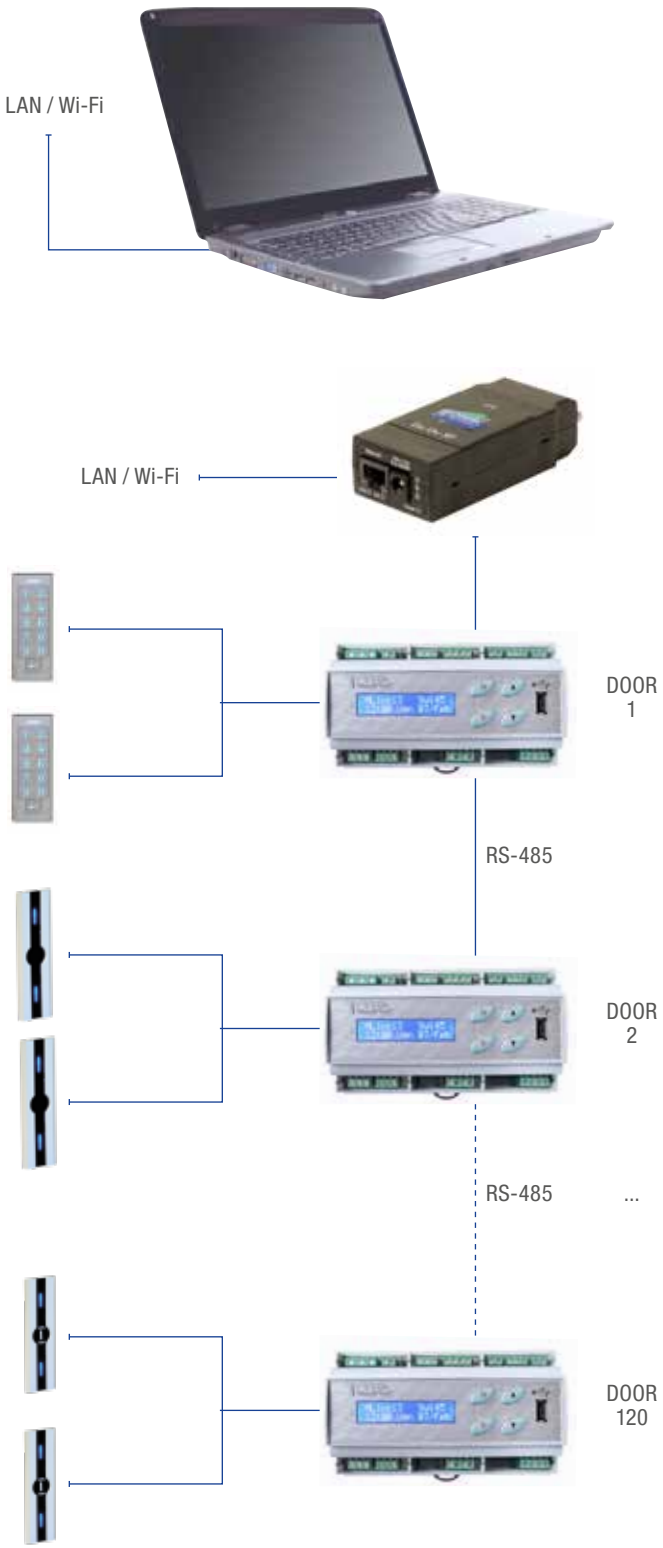

PLUS EXAMPLE

- Connection on serial network
- Connection on serial network/ethernet
- Up to 120 manageable doors
- Up to 2000 manageable users for each door

Art.	Description	€
55611NET	**MODULAR STANDALONE/NET MANAGEMENT ELECTRONICS** **For one door** Electronics that can be managed in stand alone mode for a single indipendent door and in an RS-485 serial network for the connection of up to 120 doors controlled by PC through special application software, Art. 55623. Connection to 2 peripheral reading devices (input/output) including magnetic card readers, transponder readers or code keypads. Gray ABS housing, 160 x 95 x 65 mm for attachment to DIN bar. Remote distance from the peripheral reading devices: up to 10 m with flat cable and up to 500 m with connection of the peripheral devices (readers and keypads) through dedicated RS-485 serial line (cable 4). Main power supply: 230 Vac Internal power supply with battery charger, plug, 12 V/1.2 A external Art. 00112 Power supply output 12 Vdc - 0.5 A max for electric locks Electric lock command: C./N.O./N.C. relay, time can be set from 1 to 99 seconds or bistable for operation of the electric lock N.O. input, opening from button. N.O. input for door sensor. N.O. input for lock status. N.O. input for enabled codes block. Alarm relay that can be activated through door sensor by forced opening (can be deactivated by the software from the menu). Saving of users on solid-state memory on Eeprom (minimum retention 10 years) Important: the data present in the memory can be copied and transferred to any system extensions if installed in stand alone mode. Real Time Clock (RTC) circuit for date and time management. LCD 16 x 2 display, with blue backlight for the programming and display of the system's operational states. 4-key membrane polycarbonate keyboard for programming with the following functions: Up - Down - Program - Enter. Network port: Net485 for connection and management by PC. USB port for downloading the data on the events and user list present in the memory on a USB drive. 171 Ability to save pre-existing magnetic cards coded in the second track such as, for example, credit cards, tax code cards or cards belonging to other access control systems on standard ISO 2 (if connected to a card reader Art. 55613 or 55613AL to be ordered separately). Max reading of the first 10 characters. **171 Ability to save PIN codes in ISO 2 emulation (if connected to the code keyboard Art. 55612 or 55612SS to be ordered separately).** **Functions:** - Management of 2000 users with different cards or codes - Access to all functions by local keyboard - Programming of user codes through master code - Setting of Net485 network parameters - Entering of address number for connection to PC - Programming of cards / transponders / codes - Variable length access codes with a maximum of 10 digits - Programming for 3 distinct time slots for each user. Selection of user access - Prohibition by day of the week - Programming of debit cards - Entering of users with expiration date - Deletion of user with possession of a title - Deletion of the entire user list - Date and time setting - Lock opening time selection - Anti pass-back selection with the use of 2 reading peripheral devices - Alarm setting selection after 3 attempts or for forced door - Reader block setting selection - Display of user list - Direct download of the last 500 events and user list on a USB key	486,10

CONFIGURATION 1 DOOR WITH KEYPAD

CONFIGURATION 1 DOOR WITH READER

CONFIGURATION 1 DOOR WITH TRANSPONDER

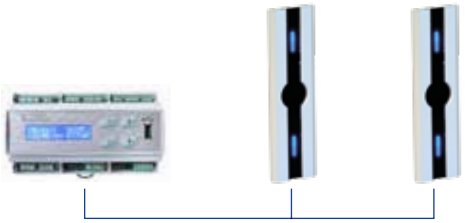

CONFIGURATION 1 DOOR WITH TRANSPONDER

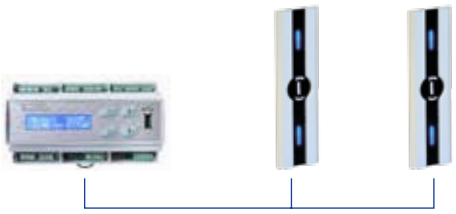

CONFIGURATION 1 DOOR WITH iBUTTON

Art.	Description	€
55613NET	**ISO 2 MAGNETIC STRIP CARD READER** ABS housing body Dimensions: 100 x 34 x 26 mm. Power supply and commands: from PC through USB port. Red and green two-color LED for the display of the operational states **Use:** magnetic strip card reader for the saving and reading of the cards by PC. **Packaging:** provided with USB connection cable	332,00
55614NET	**USB TRANSPONDER READER** ABS housing body. Dimensions: 115 x 75 x 25 mm. Power supply and commands: from PC through USB port Red and yellow LED for the display of the operational states. Operating frequency: 125 kHz (integrated antenna). **Use:** RFID tag and card reader for the saving and reading of the cards by PC. **Packaging:** provided with USB connection cable	367,50
55616NET	**USB - RS-485 CONVERTER** ABS body. Dimensions: 60 x 38 x 20 mm. Power supply: 5 Vdc / 60 mA from PC through USB port LEDs for the display of the operational states. USB 2.0 compatibility. Provided with adapter from DB9 connector to screw connector for connection to the RS-485 network. **Use:** USB - RS-485 serial port connector necessary for connection of the serial line to the PC, which only has USB ports **Packaging:** provided with USB connection cable, 80 cm long.	225,30
55618NET	**TTL - RS-485 CONVERTER** The serial port converter allows the connection of the different readers to the MultilinkNet electronic by means of a 4 poles cable for a max. length 500Mt	59,30
05913	**SERIAL RS232 - ETHERNET CONVERTER** Container in black ABS Dimensions (mm): 100 x 42 x 25 DB 9 pole connector for serial RS232 - 422 - 485 serial line selectable via dip switch 8 pole plug connector for connection to the network Operating voltage: 12 Vdc/1A from included power supply **Use:** The serial converter allows connection of devices (such as people counters) equipped with IP addresses via an Ethernet network. This way the people counter can be interrogated even from a remote PC via the local network or the internet.	580,90

Art.	Description	€
55622NET	**SOFTWARE FOR NETWORK ACCESS CONTROL** System for access control with network management by PC for RFID transponder readers, code keypads or magnetic badge readers Entering of an individual user badge A reader to the side of the PC and interfaced with it allows the saving of the magnetic card or transponder in the memory of one of the Multilinks Card entering (hereafter also understood as codes) with expiration date Entering of cards in groups with recording of sequential codes Entering of cards with 3 time slots Entering of debit cards (in entrances and/or fixed amounts) Association of personal data to the card Disabling of a single card Disabling of the cards in sequential groups Management of the card operation parameters (dates, time slots, enabled doors) Recognition of where the person is through the last badge readings with indication of the date, time, and door number Regulation of the lock relay opening time from 1 to 99 seconds “Manual” remote door opening (open/closed) Activation of the door relay in scheduled mode Total or individual reader block Emergency unlock (activation of all of the opening relays) Management of the date and time Anti pass-back management Verification operations from PC: Download movements by the name of the user associated with the accesses made Download movements by date (from day --- to day ---) of all of the enabled people Download movements by accesses (from door 1, 2, etc.) Download movements by hour/time slot Download movements by associated parameters (e.g. name – date – time – accesses) Check of incorrect codes read or attempts outside of the associated parameters Check of the card coupled to the code and vice versa in the case in which a code keypad is associated to the card reader Check and reporting of out-of-service readers Remote network operation and query Status of the active alarms Management of the event history Immediate events Operation of the system according to the different access levels	355,70

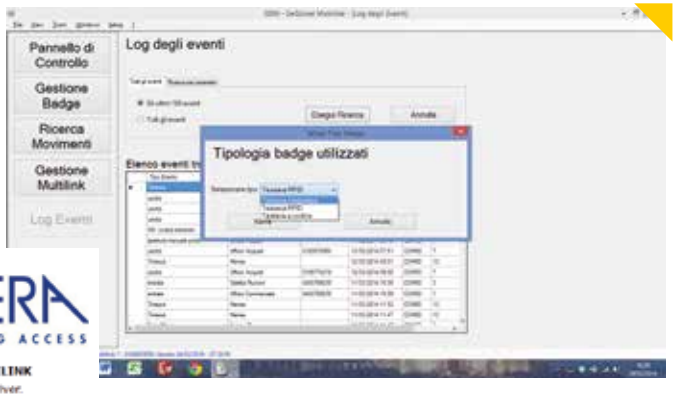

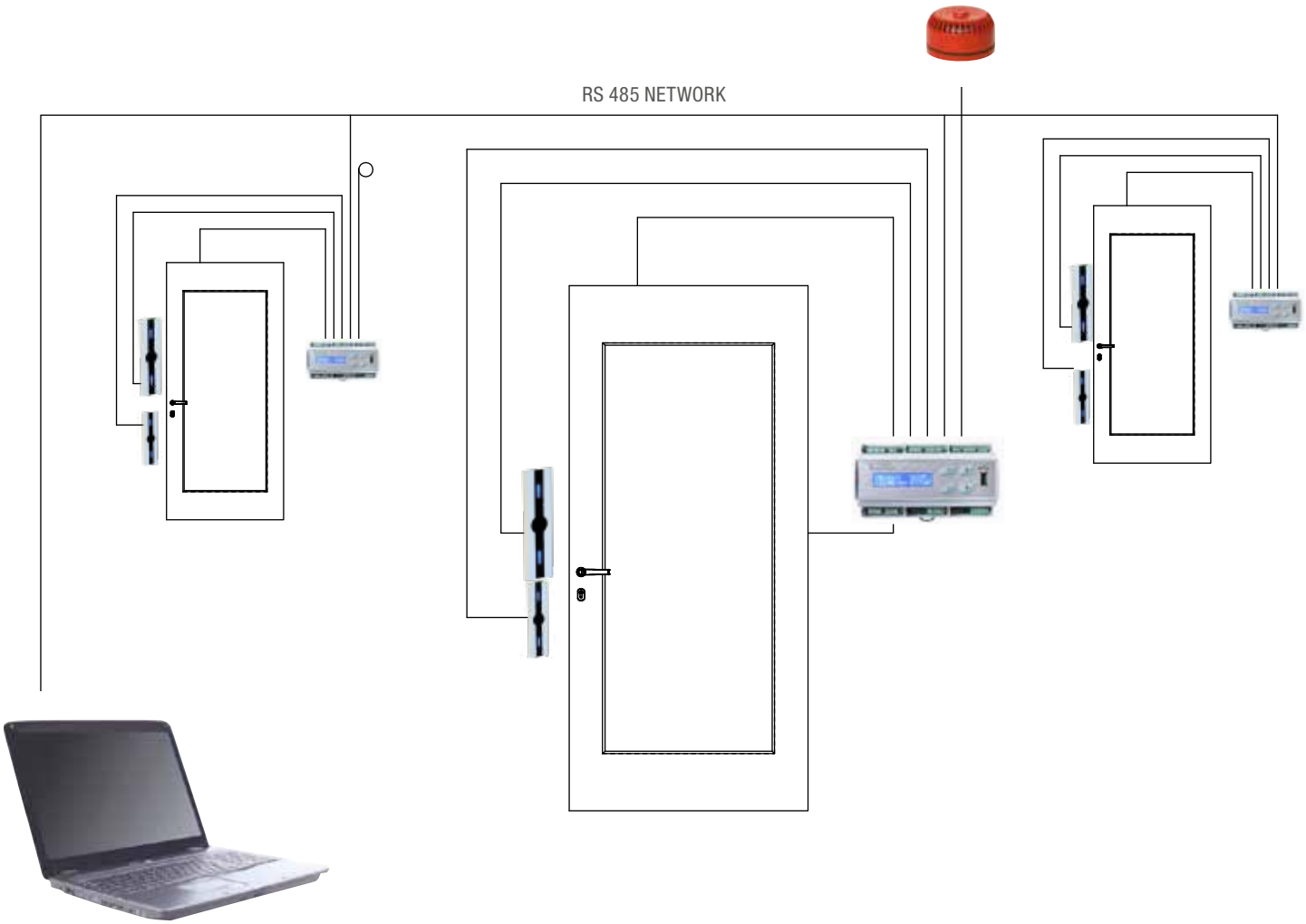
RS 485 NETWORK

Art.	Description	€
56611A	**MODULAR STAND-ALONE MANAGEMENT ELECTRONICS** Electronic circuit in white ABS container Container dimensions (mm) : 160 × 100 x 43 Operating voltage : 12 - 24 Vac/Vdc Absorbed current : 100 mA in stand-by / 600 mA at 12V and 300 mA at 24V with relay active LCD Display 3 digits in red colours 4 push buttons for programming with UP-DOWN-FUNCTION/ESC-ENTER Input for door opening from inside Input for blocking command Input for door sensor Buzzer Relay with C./NO./NC (24Vdc /10A max) adjustable from 1 to 60 sec. Alarm contact for the function of : - Door forced - Prolonged door opening from 0 to 60 sec - Anti-tamper Connection with terminal readers via Flat-cable 10 poles or RS485 Up to 490 users Memorisation via card, transponder, Button or activation code Deletion of single or entire user list Function: - Programming of new user codes through master code - Programming of cards / transponders / codes - Variable length access codes with a maximum of 10 digits - Programming new users - Deletion of single user - Deletion of the entire user list - Relay adjustment setting - Display of total users list Can be connected to 1 keypad series 55612 or 55612SS or 1 card reader 55613 or 55613AL or to 1 transponder reader 55614 - Input for indoor opening push buttons. **Use:** stand-alone system for access control. Allows memorisation of user codes or cards managed directly by the user via activation and cancellation cards. Easy installation and programming, can be utilised to activate an electromechanical lock or motorisation.	189,10

Art.	Description	€

CODE KEYPAD

Container body in ABS, dimensions (mm): 129 x 46 x 30
Keypad with 10 numeric keys plus Enter button
Membrane front in polycarbonate, dome shaped keys with touch effect
Internal buzzer for key press indication
Operating Voltage: from electronics of Art. 55611NET and 56611A
Two coloured red/green LED for indication of operating status
Connection with the control unit: in TTL with ISO2 emulation
Tamper contact (active on Art. 55611NET)
Codes available comprised of 1 to 10 digits

55612	Housing in dark grey ABS	
55612CR	Housing in ABS with matt chromium finish	**195,60**
	Note: These items need to be connected with main electronics 55611NET or 56611A	**195,60**

Packaging: with 10 metres of flat connection cable between keypad and control unit

ANTI-VANDAL CODE KEYPAD

Front of body in stainless steel (mm) 94 × 73 × 4,5
Backlit keypad with 10 numeric keys plus Enter button
IP protection rating IP 65 for external operation
Internal buzzer for key press indication
Operating Voltage: from electronics of Art. 55611NET and 56611A
Red and green LEDs for indication of operating status
Connection with the control unit via flat cable or RS485

55612SS	Mortice version	**296,40**
56612SSD	Rim version with ABS housing dimensions mm 103 × 84 × 25	**373,50**

Note: These items need to be connected with main electronics 55611NET or 56611A

Packaging: with 10 metres of flat connection cable between keypad and control unit

ANTI-VANDAL CODE KEYPAD

Front of body in stainless steel (mm) 110 x 40 x 14
Backlit keypad with 10 numeric keys plus Enter button
IP protection rating IP 65 for external operation
Internal buzzer for key press indication
Operating Voltage: from electronics of Art. 55611NET and 56611A
Red and green LEDs for indication of operating status
Connection with the control unit via flat cable or RS485

55612PD	Flush mount keypad, silver colour	**308,30**
55612PDN	Flush mount keypad, black colour	**320,10**
55612PDC	Rim mount keypad, silver colour	**272,70**
55612PDCN	Rim mount keypad, black colour	**284,20**

Note: These items need to be connected with main electronics 55611NET or 56611A

Art.	Description	€
55613A	**MAGNETIC CARD READER** Swipe reader in black ABS Base in silver anodized aluminium (black on request) Dimensions (mm): 140 x 40 x 34 Operating Voltage: from electronics of Art. 55611NET and 56611A Red and green LEDs for indication of operating status Connection with the control unit: RS-485 **Note:** These items need to be connected with main electronics 55611NET or 56611A	224,10
55613AAL	**ANTI-VANDAL MAGNETIC CARD READER** Swipe reader in ABS in silver anodized aluminium. Dimensions (mm): 68 x 29 x 30 Operating Voltage: from electronics of Art. 55611NET and 56611A Red and green LEDs for indication of operating status Connection with the control unit: RS-485 **Note:** These items need to be connected with main electronics 55611NET or 56611A	254,90
55614	**TRANSPONDER CARD READER** Container body in dark grey ABS with front in polycarbonate Dimensions (mm): 129 x 46 x 30 Operating Voltage: from electronics of 55611NET and 56611A Transponder reader distance: 30 mm. (55616T and 55616W) - 100 mm. (55616) Two coloured red/green LED for indication of operating status Connection with the control unit: in TTL with ISO2 emulation The transponder is based on the TAG format card operativity **Note:** These items need to be connected with main electronics 55611NET or 56611A **Packaging:** with 10 metres of flat connection cable between reader and control unit	162,40
55614SC	**TRANSPONDER CARD READER FOR CABINETS AND BOXES** Housing in blue Abs - dimensions 90x57x24mm Operating Voltage: from electronics of 55611NET and 56611 Transponder reader distance: 30 mm. (55616T and 55616W) - 100 mm. (56616) Two coloured red/green LED for indication of operating status Operating technology in 125 Khz **Use:** Trasponder reader for mounting behind panels, cabinets or doors. Detection can be done through thimber, glass or plastic **Note:** These items need to be connected with main electronics 55611NET or 56611A **Packaging:** with 10 metres of flat connection cable between reader and control unit	162,40

Art.	Description	€

LETTORE DI TRANSPONDERS

Front plate in anodised aluminium
External dimension 140x40x6 mm
Internal dimension 118x27x17 mm
Operating Voltage: from electronics of 55611NET and 56611
Transponder reader distance: 30 mm. (55616T and 55616W) - 100 mm. (56616)
Connection with the control unit: in TTL with ISO2 emulation or RS485
Three colours blue/red/green for indication of operating status

55614PD	Front plate in s.a.a finish	**149,40**
55614PDN	Front plate in black anodised aluminium	**149,40**

Note: These items need to be connected with main electronics 55611NET or 56611A

DALLAS IBUTTON READER

Front plate in anodised aluminium
External dimension 140x40x6 mm
Internal dimension 118x27x17 mm
Operating Voltage: from electronics of 55611NET and 56611A
Connection with the control unit: in TTL with ISO2 emulation or RS485
Three colours blue/red/green for indication of operating status

55618PD	Front plate in s.a.a finish	**155,30**
55618PDN	Front plate in black anodised aluminium	**155,30**

Note: These items need to be connected with main electronics 55611NET or 56611A

BOX FOR SURFACE FIXING

Box in anodized aluminium for 55614PD and 55618PD
External dimensions (mm): 140 x 40 x 20

05502PD	Silver anodized	**45,10**
05502PDN	Black anodized	**45,10**

05502T

PROTECTION COVER

Box in Plexiglass for reader 55614PD and 55618PD
External dimensions (mm): 153 x 47x 222

41,50

Art.	Description	€
	LETTORE SUPPLEMENTARE PER TOUCH KEY READER CON ELETTRONICA PER MINILINK E MULTILINK NET Touch Key Reader body in stainless steel Front plate dimensions (mm): 105 × 40 × 5 Two colours red/green LED for indication of operating status Operating Voltage: from electronics of 55611NET and 56611 Connection with the control unit: in TTL with ISO2 emulation or RS485 (if combined with 55611NET)	
58018ML	Front plate in silver anodized aluminium	**143,50**
58018MLN	Front plate in black anodized aluminium	**143,50**

Note: These items need to be connected with main electronics 55611NET or 56611A

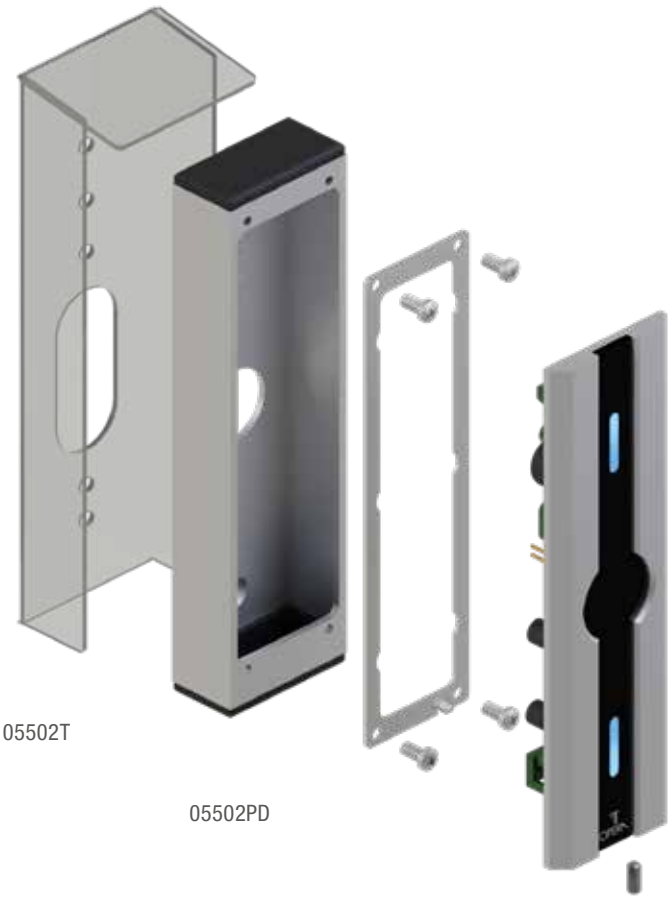

05502T

05502PD

55614PD

Art.	Description	€

MAGNETIC STRIP CARD

Card for use with encoded user in 2nd track ISO2 standard
For use with card reader 55613 and 55613AL
300 OE magnetic strip
Dimensions (mm): 86 x 54 x 0.8

55615	OPERA silk screen in four colours	**5,20**
55615SLA	Custom silk screen in four colour on main side	**7,40**
55615SLB	Custom silk screen in four colour on both side	**9,10**

56616

56616T

56616W

TRANSPONDER

User-coded transponder, based on 125 KHz and Mifare operation (article 56616MF).
To be combined with transponder readers series 55614 - 55614PD - 55614SC - 57301 and article55512MF (only for article 56616MF)

56616	Card Formats	**5,20**
56616MF	Opera screen-printed card format dimensions: 86 x 54 x 0.8 mm	**6,50**
56616SLA	White card format dimensions: 86 x 54 x 0.8 mm	**7,40**
56616SLB	Card format with Customer screen printing in four-color process on both sides	**9,10**
56616T	Grey keychain format dimensions: 40 x 31 x 4 mm	**8,10**
56616W	Transparent plastic wristband format, dimensions: 240 x 13 mm	**21,80**

DALLAS iBUTTON

iButton body in chromium plated metal on black ABS support
dimensions (mm): 16 (diameter) x 5
Dimensions of the ABS support (mm): 53 x 15

58015	Key fob in black plastic	**13,00**
58015G	Key fob in yellow plastic	**14,20**
58015R	Key fob in red plastic	**14,20**
58015V	Key fob in green plastic	**14,20**

Use: operating key for access control Touch Key.

Note: Each Button key is unique and unrepeatable and there are no copies. If the key is lost it must be cancelled from the reader memory and replaced with a new one.

Versione da 3,2”

Versione da 4,0” HD

Art.	Description	€
	DIGITAL DOOR VIEWER Size: - 115(W) * 64(H) * 16(D)mm - 122(W) * 66(H) * 16(D)mm Power source: 3AAA Batteries (good for approx. 5000 “peep”) Sensor: - 1,3 Mega Pixel CMOS - 2,0 Mega Pixel CMOS LCD screen: - 3.2” TFT 320x240 - 4,0” TFT800x480 View angle: 160 degree Fits door: 42-95mm (1.65”-3.74*) Fits barrel hole: 14-28mm	
	Version 3,2”	
57700	Silver colour	**112,60**
57700GD	Gold colour	**112,60**
	Version 4,0”	
57701	Silver colour	**136,30**
57701GD	Gold colour	**136,30**
00577	**On request:** brass barrel for doors from 95 to 122mm	**7,70**

Operating temperature: from -15°C to 50°C
Viewing angle of 160°
Activation through button with automatic shutdown after 10 seconds.
Camera designed for mounting on doors with a thickness ranging from 42 to 72 mm and from 65 to 95 mm
(Tube for doors from 95 to 105 mm provided separately upon request)

Door thickness
The door viewer can be installed on doors from 68 to 94mm thick. No need to make extra holes on the door to replace existing viewer

Sensor resolution
Cam sensor technology CMOS
1,3 MegaPixel for item 57700
2,0 MegaPixel for item 57701

LCD Monitor
3,2" (resolution 320x240) for item 57700
4,0" (resolution 800x480) for item 57701

Power
3 batteries AAA
4000 screen activation capacity

View angle
160° angle view

Monitor

Viewer both side

Outside camera

EASY FITTING IN 3 STEPS

1

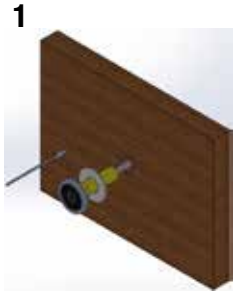

2

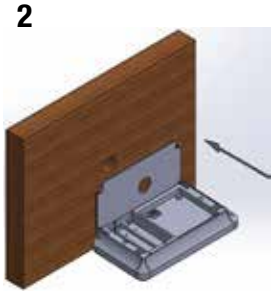

3

Lcd monitor 3,2"
Resolution 320x240
Dim. 115x64x16mm

Lcd monitor 4,0"
Resolution 800x480HD
Dim. 122x66x16mm

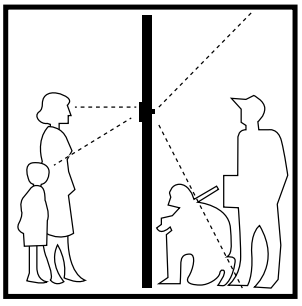

i-Vision is a new digital door viewer range 16mm thick. This device displays an image of the person who visits your door, providing a safe way to identify visitors and potential bogus callers before opening your door. Very clear image on screen, easy operation - just press the button, automatic switch off after 10 seconds

AVAILABLE COLOURS

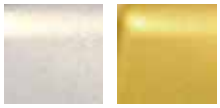

Silver Brass

PLUS

- Elegant and thin design
- Easy mounting with no tools
- Easy batteries replacement
- Low consumption, automatic switch off after 15 seconds

SEE THE WEB PAGE

Art.	Description	€
55640SE	**MANAGEMENT ELECTRONICS FOR CARD READER ATM AND CREDIT CARD MANAGEMENT FOR SELF-SERVICE AREA** Boxed management electronics for mounting on DIN rail Dimensions: mm 105 x 95 x 62 Power supply: 11÷14 Vac from external power supply (not included) Front panel with: - Network presence LED - Low battery LED - Central reset button and reader - Key selector for Active/System/Day/Out of Service - Input for remote selection of Active/System/Day/Out of Service - Pre-programmed standard user operation times and pre-warning - Normally Open (N.O.) input for time reset button - Normally Closed (N.C.) input for anti-malfunction detector - Normally Open (N.O.) input for external openings management from button - Normally Open (N.O.) input for internal opening - Normally Open (N.O.) input for external door sensor - Normally Open (N.O.) input for internal door sensor (door open / reader lock) - Normally Open (N.O.) input for ABI code enablement (e.g., timer art. 05301C) - Amplified output for speaker connection - Customizable internal voice synthesis management on SD Card - Management of anti-malfunction alarm - Output contact for managing a telephone dialer - Relay lock opening C./N.O./N.C. - 10A selectable at 2 or 5 sec. - Alarm output with relay 5A/230V - **Application:** management electronics for ATM and credit card reader for opening the door of the automatic bank branch - On request: identification of a specific ABI code for opening using the bank's membership card	426,00

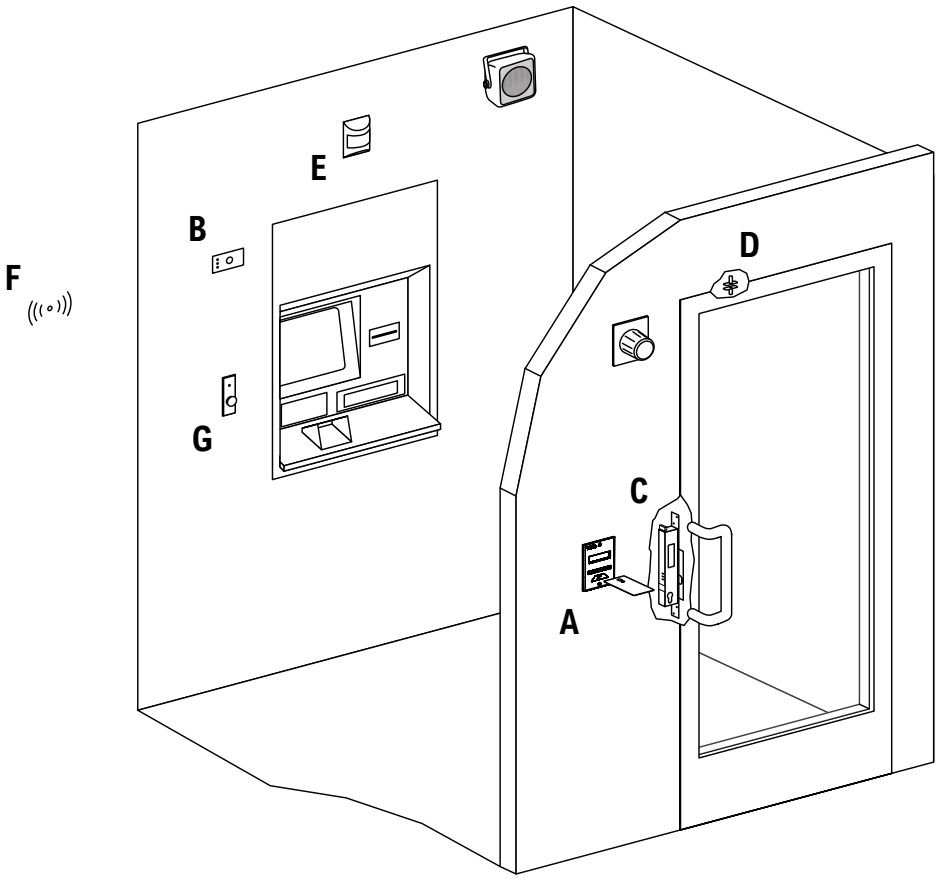

LEGENDA

- **A** Bank card reader
- **B** Local control unit
- **C** Solenoid lock
- **D** Magnetic sensor
- **E** Infrared sensor
- **F** Emergency dialer command
- **G** Restart time button

Art.	Description	€
55642SE	**MANAGEMENT ELECTRONICS FOR CARD READER ATM AND CREDIT CARD** Electronic circuit in a gray ABS box Box dimensions: mm 160 x 100 x 43 Power supply: 12/24 Vac/dc Current consumption: 100 mA in stand-by / 600 mA at 12 Vac/dc or 300 mA 24 Vac/dc with active relay and connected device. RS-485 serial line for connection to the reader Open command input from button Lock command input Door sensor input Out of Service input Day operation input Selection of dimensional reading for magnetic stripe recognition Relay with C./N.O./N.C. contacts (24 Vdc / 5 A max) timer set to 2 or 5 sec. for electro-lock opening. Recognized reading tracks: 2nd and/or 3rd ISO - ATM, Visa, Carta Sì, Mastercard, Bancoposta, American Express **Application:** ATM and credit card reader for opening the door of the automatic bank branch. **On request:** identification of a specific ABI code for opening using the bank's membership card.	345,00

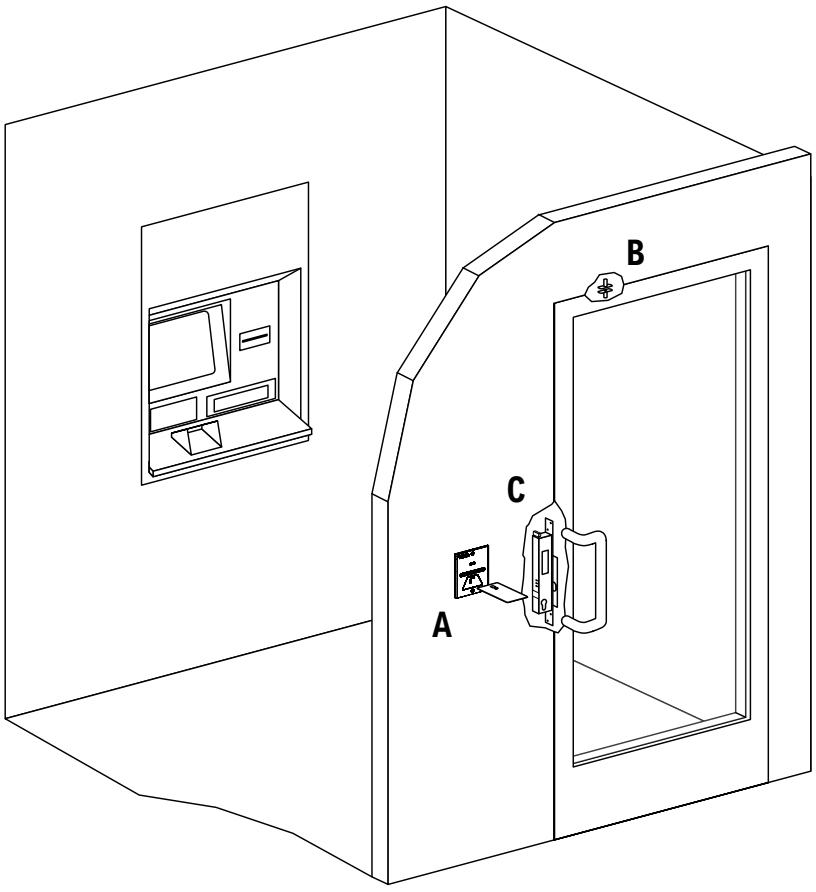

LEGENDA

A ATM reader
B Magnetic sensor
C Lock

Common characteristics: Powered by management electronics via RS-485 serial connection. Reading tracks: 2nd and 3rd ISO - ATM, Visa, Carta Sì, Mastercard; Bancoposta, American Express.

Art.	Description	€
55641A	**MAGNETIC CARD INSERTION READER** Front made of silver anodized aluminum Backlit LCD display indicating operational states Front dimensions: mm 100 x 80 x 5 Internal dimensions: mm 70 x 65 x 95 (internal depth max mm 100) **Application:** can be combined with item 55640SE.	640,00
55641B	**MAGNETIC CARD INSERTION READER** Front made of silver anodized aluminum Red and Green LEDs indicating operational states Front dimensions: mm 100 x 80 x 5 Internal dimensions: mm 70x65x95 (internal depth max mm 100) **Application:** can be combined with item 55642SE.	520,00
55641C	**MAGNETIC CARD INSERTION READER** Front made of silver anodized aluminum Red and Green LEDs indicating operational states Front dimensions: mm 202 x 40 x 5 Internal dimensions: mm 146 x 35 x 80 (internal depth) **Application:** can be combined with item 55640SE.	520,00

NEW

	Art.	Description	€
	55641D	**SWIPE MAGNETIC CARD READER** Black ABS reader body with red and green LEDs for indicating operational states Dimensions: 40 x 40 x 35% 20 (silver finish) **Application:** can be combined with item 55642SE.	245,00
	55641E	**SWIPE MAGNETIC CARD READER** Reader body in silver anodized aluminum with Red LED Dimensions: about 30 x 3 and operational states **Application:** can be combined with items 55640SE and 55642SE.	495,00
NEW	55641F	**SWIPE MAGNETIC CARD READER** Frontal mounting in silver anodized aluminum Red and Green LEDs indicating operational states Frontal mounting dimensions: mm 202 x 40 x 5 Reader body in silver anodized aluminum Dimensions: mm 85 x 35 x 35 **Application:** can be combined with items 55640SE and 55642SE.	520,00
	55641G	**OPEN BUTTON** Frontal mounting in silver anodized aluminum Button with Normally Open (N.O.) opening contact with backlit blue LED frame Red and Green LEDs indicating operational states Dimensions: mm 140 x 40 x 6 **Application:** can be combined with item 55640SE.	84,00

Art.	Description	€
05502PDB	**SURFACE MOUNT BOX** Box in silver anodized aluminum External dimensions: mm 140 x 40 x 20 **Application:** for opening button item 55641G and for time reset button item 05645	65,00

Art.	Description	€
05645	**TIME RESET BUTTON** Red-flapped wings with Normally Open (N.A.) contact Red LED indicating the time reset request Dimensions: mm 140 x 40 x 6 **Application:** time reset button for control unit item 55640SE	94,80

Art.	Description	€
05648	**SPEAKER** Speaker to be mounted in a white ABS box for connection to voice synthesis Dimensions: mm 118 x 87 x 86 Power: 20 W/4 ohms	66,40

Art.	Description	€
05651	**CANOPY HOUSING** Black painted steel canopy housing for external application of reader items 55641A, 55641B Dimensions: mm 106 x 86 x 110	166,00

SURFACE MOUNT BOX
Silver anodized aluminum box

05652	External dimensions: mm 202 x 40 x 40	78,00
05653	External dimensions: mm 202 x 40 x 85	128,00

Application: for insert card reader item 55641C

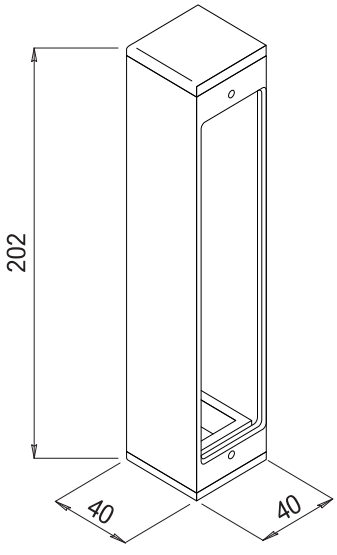

05652

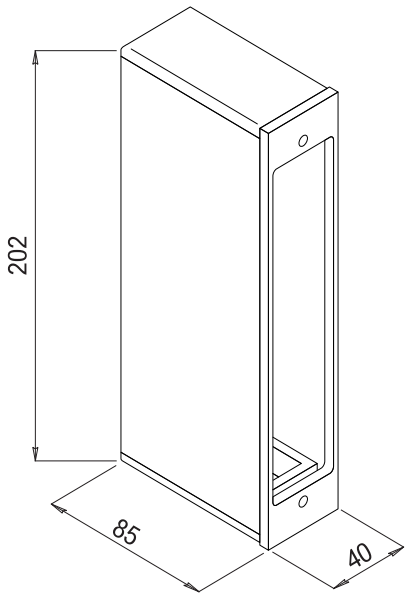

05653

Art.	Description	€
57301	**ANTI-VANDAL CODE KEYPAD** Container body in anodized aluminium Dimensions (mm): 151 x 44 × 23 Keypad with backlit buttons Remote electronic in ABS - dimension mm111 x 72 × 29 Operating voltage: 12/24 Vac/dc Absorbed current: 50 mA in stand-by / 95 mA with relay active Internal buzzer for key press indication Housed-in electronics for: Management of the lock opening command (management of 2 doors with only one keypad) Tamper contact with alarm activation IP rating: IP65 Built in electronic circuit inside the keypad Timed output contact from 1-99 seconds for control of lock opening Up to 1,000 codes can be memorised Up to 10 transponder cards at 125 KHz can be memorised Programming of access with only PIN, only transponder or PIN + transponder Memorisation of separate codes for door 1 or door 2 Activation of tamper alarm Code cancellation: single or total Keypad with 10 numeric keys plus Enter button Call push button can be activated Block of keypad operation after insertion of three incorrect codes with activation of the alarm and timed auto-reset contact Input for door sensor with N.C. contact (open with door closed) Relay 1 with C./N.O./N.C contacts for opening of electromechanical locks Relay 2 with C./N.O./N.C contacts selectable alternatively for: - alarm signalling (burglary, invalid codes) - door opening i	355,70

TRANSPONDER
User-coded transponder, operating at 125 kHz.

56616	Screen-printed card format Opera dimensions: mm 86 x 54 x 0.8	5,20
56616SLA	Card format with Customer quadrichrome screen printing on one side	7,40
56616SLB	Card format with Customer quadrichrome screen printing on two sides	9,10
56616T	Gray keychain format dimensions: mm 40 x 31 x 4	8,10
56616W	Transparent plastic bracelet format, dimensions: mm 240 x 13	21,80

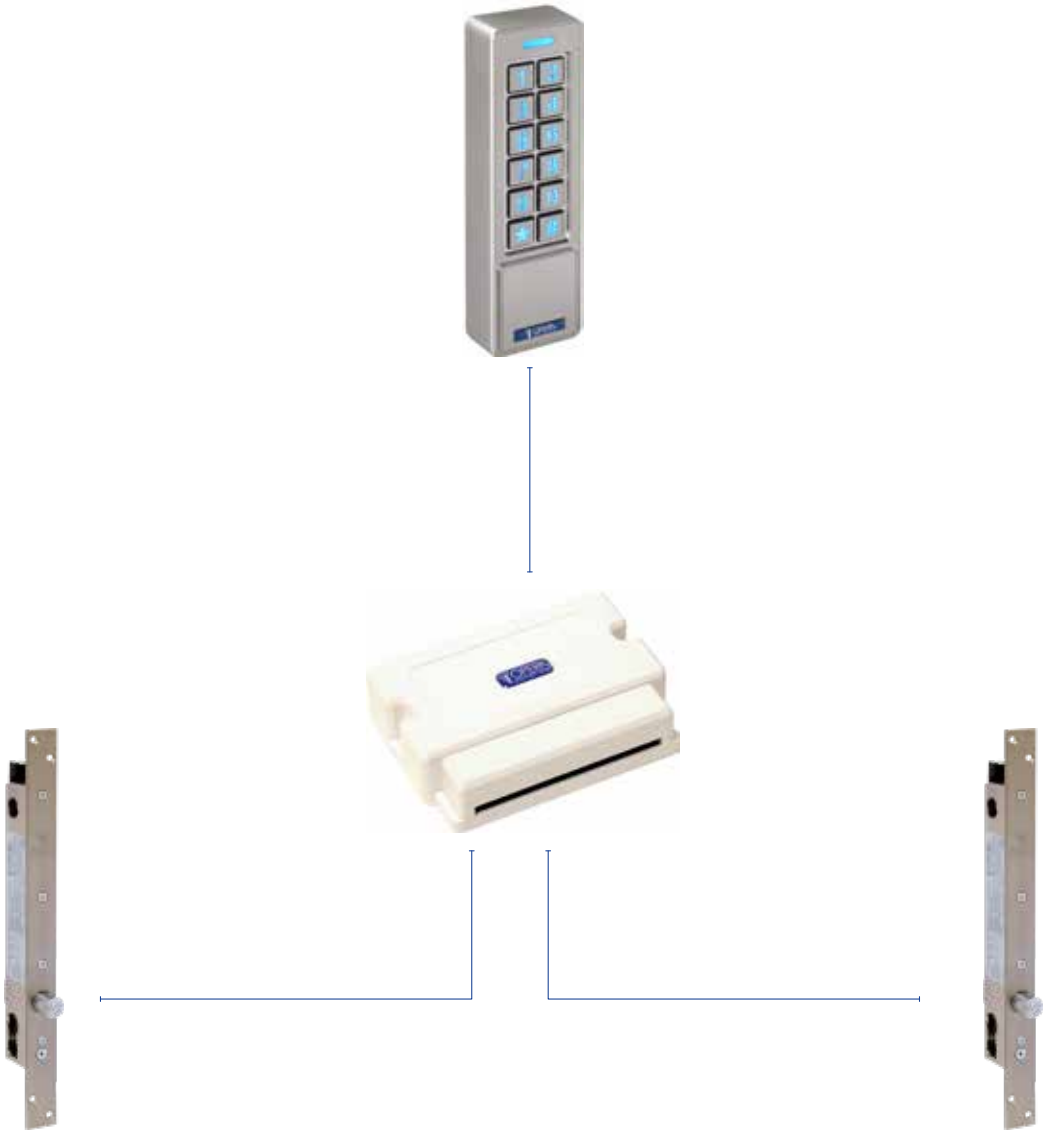

Door 1

Door 2

PIN

RFID

PIN + RFID

Art.	Description	€

KEYPAD - STAND ALONE

Container body in anodized aluminium
Flush version - Dimensions (mm): 110 x 40 x 15l
Rim version — Dimensions (mm) : 110 x 45 x 3/
Keypad with backlit buttons
Operating voltage: 12 Vac/dc - 24 Vac/dc
Absorbed current: 30 mA in stand-by / 60 mA with relay active
Internal buzzer for key press indication
IP rating: IP65
Housed-in electronics for:
Management of the lock opening command
Output relay N.O - N.C - (12/24Vac/dc - 1,5A max)
Timed output contact from 1-99 seconds for control of lock opening
Up to 500 codes can be memorised from 2 to 6 digits
Input N.O for door opening command
Code cancellation: single or total
Keypad with 10 numeric keys plus Enter button
Block of keypad operation after insertion of 5 incorrect codes with activation of auto-reset in 1 minute

57312	Flush version - silver finish	**320,10**
57312N	Flush version - dark finish	**332,00**
57313	Rim version - silver finish	**284,50**
57313N	Rim version - dark finish	**296,40**

application example

Art.	Description	€

TOUCH KEY READER

Front plate in anodized aluminium
Front plate dimensions (mm): 105 x 40 x 5
Electronic circuit in white ABS container
Container dimensions (mm): 111 x 72 × 29
Operating voltage: 9 Vac / 12 Vdc
Absorbed current: 10 mA in stand-by / 40 mA with relay active
Operating key Dallas (sold separately Art. 58015)
Supply of 2 Dallas Master system keys:
1 “Green” programming key
1 “Red” cancellation key
Relay for door opening contact selectable in monostable or bistable mode
Programmable users: 500
Two colours red/green LED for indication of operating status

58000	Electronics + reader with silver anodized front	199,20
58000N	Electronics + reader with black anodized front	199,20
58013	Additional reader with silver anodized front	70,00
58013N	Additional reader with black anodized front	70,00

Use: the stand-alone system for access control Touch Key is based on the operativity of the Dallas key which, being unique and unrepeatable, provides the highest standards of security. Easy to install and program, it can be used for electromechanical lock release, motorisation or, selecting the bistable relay, to arm or disarm an alarm system. Also ideal for use in applications where the reader must be exposed to weather conditions

DALLAS iBUTTON

Button body in chromium plated metal on black ABS support
dimensions (mm): 16 (diameter) x 5
Dimensions of the ABS support (mm): 53 x 15

58015	Key fob in black plastic	13,00
58015G	Key fob in yellow plastic	14,20
58015R	Key fob in red plastic	14,20
58015V	Key fob in green plastic	14,20

Use: operating key for access control Touch Key.
Each iButton key is unique and unrepeatable and there are no copies.
If the key is lost it must be cancelled from the reader memory and replaced with a new one.

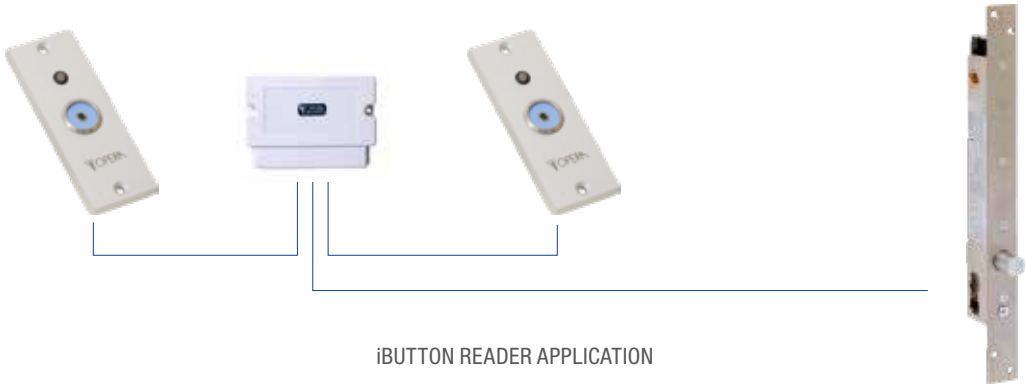

iBUTTON READER APPLICATION

58200SA

Art.	Description	€
	BIOMETRIC Reader body in silver anodized aluminum Dimensions: mm 95 x 51 x 25 Power supply: 9-14 Vdc (Assorted: 100 m) Red, orange, and green LEDs for operational status indication Functions: - Fingerprint enrollment through Master fingerprint - Touch sensor: thermal fingerprint recognition - Verification and image capture time: 1 second - User capacity: 97 fingerprints - 2 Separate user groups - Administrator capacity: 3 fingerprints - Operating temperature: -20 / +50 °C - Protection class: IP67 - 10-conductor connection cable - length 1 m - Anti-tampering tamper contact - Relay output (24 Vac/dc - 2A) with C./N.A./N.C. contacts for electro-lock opening - Relay activation time: momentary (1, 3, 5, 10, 20, 30, 60 sec.) or latching (ON/OFF) - Application: Stand-alone fingerprint reader that allows secure and reliable door openings through high-quality thermal fingerprint reading. - Suitable for outdoor use - Stand-Alone biometric reader for indoor applications. - Can be combined with item 05820 or 05820SB for outdoor applications.	
58200SA	Stand-Alone biometric reader for indoor applications. Can be combined with article 05820 or 05820SB for outdoor applications.	**675,80**

05820SB

05820SB	**TOUCH BUTTON** Button body in silver anodized aluminum Dimensions: mm 95 x 51 x 25 Power supply: 12 Vdc (9-14 Vdc) Consumption: 100 mA max Red/green LEDs for operational status indication Touch-sensitive opening button with internal management electronics Operating temperature: -20 / +50 °C Protection class: IP67 Relay output (24 Vac/dc - 2A) with C./N.A./N.C. contacts for electro-lock opening Relay activation time: momentary (1, 3, 5, 10, 20, 30, 60 sec.) or latching (ON/OFF) **Application:** can be combined with the stand-alone reader item 58200SA.	**249,00**

05820	**REMOTE MANAGEMENT ELECTRONICS** Gray ABS box mm. 90 x 36 x 32 for mounting on DIN rail, 2 modules Power supply: 9 - 14 Vdc Consumption: 80 mA Communication with the biometric reader: RS-485 Operating temperature: 0 / 4-40 °C Protection class: IP31 2 Relay outputs (24 Vac/dc - 3A) with C./N.A./N.C. contacts for independent opening of 2 electro-locks Relay activation time: momentary (1, 3, 5, 10, 20, 30, 60 sec.) or latching (ON/OFF) **Application:** remote management electronics for pairing with reader item 58200SA.	**189,70**

Art.	Description	€
05821	**PROTECTION COVER** Polycarbonate protective cover for using the exposed reader directly in harsh weather conditions Dimensions: 130 mm x 78 mm x 30 mm	105,50

Application Example
Stand-Alone Version

58200SA

Application Example
remote control Version

58200SA

05820SB

Application Example
Remote electronic
Version on DIN rail

58200SA

05820

STAND-BY

ENABLED
FINGERPRINT

DISABLED
FINGERPRINT

doora

REMOTE EASY ACCESS

Doora...
No key, No stress!

www.doora.it

doora
REMOTE EASY ACCESS

Which advantages?

Being a GSM system, there is no risk of informatic hacking.
It can be installed even in spaces with no internet connection.

The access can be **managed remotely from everywhere in the world and without internet connection.**

L'accès peut être **géré à la distance partout dans le monde** sans connexion internet.

System can manage **up to 18 doors** in one single connection/PIN.

It can authorize **single time slots.**

Zero costs of maintenance/management.

GSM telephonic door opener
Operation mode by SIM card activated by portable or fixed phone

Exits
Two exit contacts, manageable direct or bistable

Programming
By Pc or App

Users quantity
The internal memory can save up to 1.000 users

Confirmation notifications
Received command confirmation message forward

SMS forward message if the door is opened
Function can be activated by App or Software

Free of charge App for the SMS commands management
Can be downloaded on the Apple Store or Google Play.

GSM radio version
FFunctioning extension with radio modules and peripheral devices

Exits activation
By call or code if combined with keyboards

Supplementary exits
Can be combined with up to 18 supplementary radio modules for direct activation or by keyboard

App Opera-57501

Download on the App Store | GET IT ON Google Play

PLUS EXEMPLE

- Easy installation and use
- Manageable from any telephone device
- Operations can be activated with a simple call or by SMS
- SMS answer/confirmation

For Residential Use

Doora is the suitable system for those who want to manage their apartment remotely, at any time and from anywhere.

It is ideal for remote activation of door openings, automation of automatic gates, activation and deactivation of alarm systems, turning on lights, activating the air conditioner, or garden irrigation system.

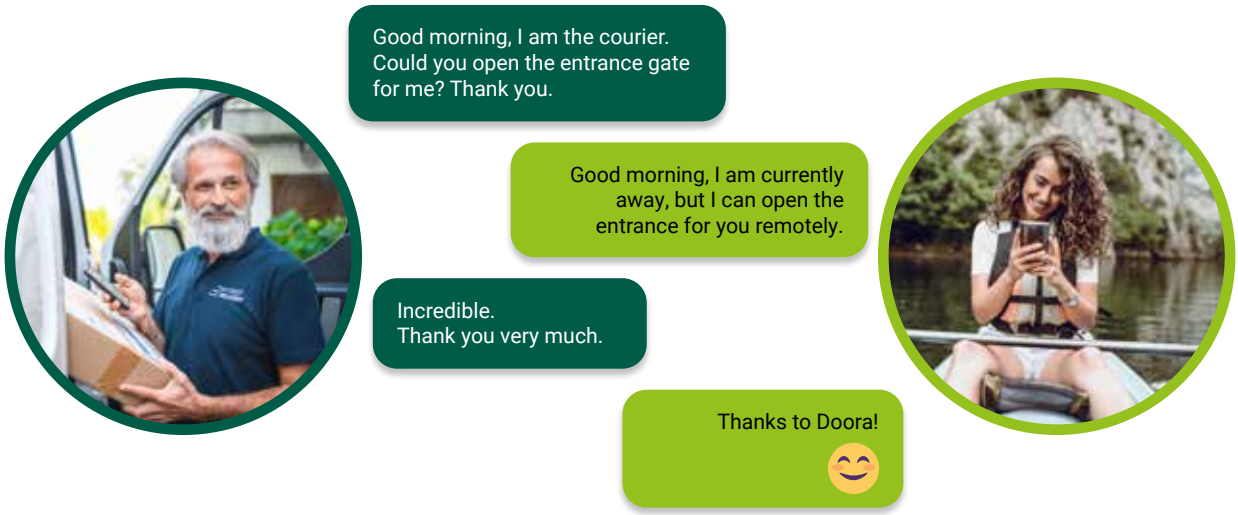

For B&B

If you own a B&B and want to solve the issue of key delivery to your guests and cleaning staff, DOORA is the system for you.

Thanks to the DOORA system, your guest (or service personnel) can access your B&B with just **two simple steps:**

1. With a phone call, they can open the gate/door of the property.
2. Once at the front door, they just need to enter a code to gain entry

With DOORA, you will solve the key delivery problem and ensure the security of your guests, preventing the possibility of keys being copied for illicit reasons.

Art.	Description	€

DOORA GSM TERMINAL

White ABS body for wall mounting
Dimensions: mm. 160 x 100 x 43
Power supply: 12/24 Vdc – 12/18 Vac
Absorption: 90 mA at 12 Vdc

LED signalling on the front plate of the box for:
- Green colour LED for the system status visualisation
- Yellow colour LED for the active/faulty connection
- Red colour for exit 1 active visualisation
- Red colour for exit 2 active visualisation

Internal GSM module UMTS – 3G
Slot for the SIM card insertion (on demand external antenna for a
USB connector type B for the configuration and the firmware update
Internal connections by screw clamps
Can be matched by radio to keyboards, relay modules and other expansion devices
Relay exit 2 C:/N.O./N.C. (12V / 2A max) selectable
Work independently with temporized monostable contact (for example lock opening) or bistable (for example alarm activation and deactivation) by portable phone.
2 optoisolated entries with N.O. contact

Functions:
- Controllable Exit by SMS
- SMS for the entry activation (executed operation or alarm)
- Internal memory with up to 1.000 authorized telephone numbers
- Configuration by Windows Pc software, App or SMS
- Activation selection by call, App or SMS
- SMS confirmation for the sent message receipt
- Entry contacts for the confirmation by SMS of the executed operation

57501	GSM Terminal	**415,00**
57501RF-868	GSM Terminal with radio module 868 MHz	**533,50**

Use: remote activation system for door opening, garages, gates, alarms, lighting, irrigation system, etc. Through the entry contacts, it can give information regarding the alarm activation, the door opening, the lack of power supply in the apartment, etc.

APPLICATION EXAMPLES

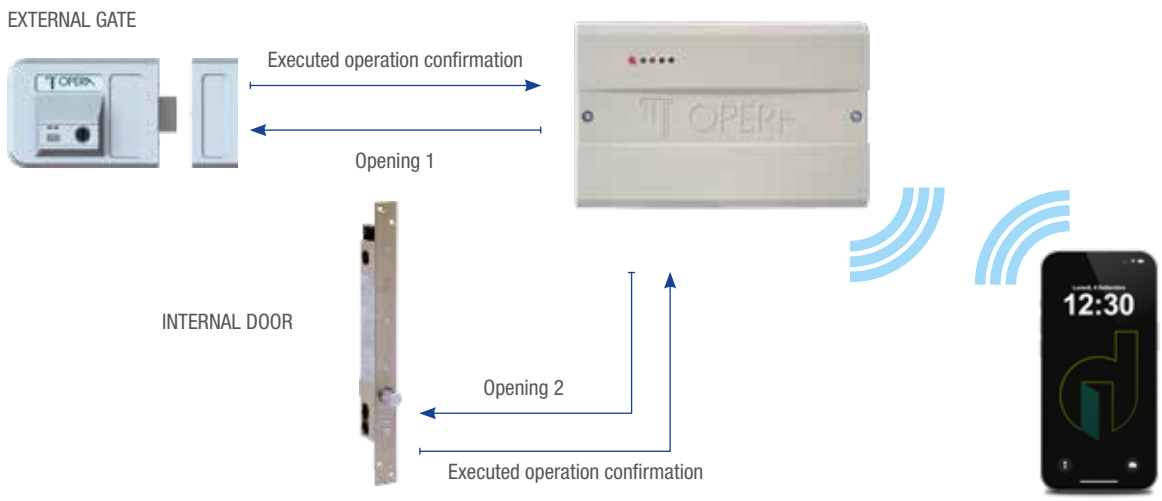

Art.	Description	€

57512RF-868 **WIRELESS KEYPAD** **213,40**

Dark gray ABS box body, dimensions: mm 129 x 46 x 30
Keypad with 10 numeric keys and an Enter button
Polycarbonate membrane film, domed keys with tactile feedback
Internal buzzer for signaling keypress success
Power supply: 12 Vac/dc - 24 Vdc
Status LED for radio connection and operational states display
868 MHz radio connection with GSM terminal item 57501RF-868
Maximum range: 30 meters in an open area

Operation: in conjunction with the GSM control unit item 57501RF-868, allows for door opening by entering the user's PIN.
There are no wired connections between the keypad and the GSM control unit since transmission occurs wirelessly.

57512SRF-868 **OUTDOOR VANDAL-RESISTANT KEYPAD WITH WIRELESS CONNECTION** **367,50**

Front panel and keys made of stainless steel
Dimensions with black ABS housing to be applied: mm 103 x 84 x 25
Keypad with 10 backlit yellow numeric keys plus an Enter button
Suitable for outdoor use
Buzzer on the radio board to signal successful keypress
Power supply: 12 Vac/dc - 24 Vdc
Status LED for radio connection and operational states display
868 MHz radio connection with GSM terminal item 57501RF-868
Maximum range: 30 meters in an open area

Operation: in conjunction with the GSM control unit item 57501RF-868, allows for door opening by entering the user's PIN. There are no wired connections between the keypad and the GSM control unit, as transmission occurs wirelessly.

OUTDOOR VANDAL-RESISTANT KEYPAD WITH WIRELESS CONNECTION

Front panel and keys made of anodized aluminum
Dimensions with black ABS housing to be applied: mm 120 x 46 x 20
Keypad with 10 backlit white or blue numeric keys plus an Enter button
Suitable for outdoor use
Buzzer on the radio board to signal successful keypress
Power supply: 12 Vac/dc - 24 Vdc
Status LED for radio connection and operational states display
868 MHz radio connection with GSM terminal item 57501RF-868
Maximum range: 30 meters in an open area

57513RF-868 Silver color **367,50**
57513NRF-868 Black color **367,50**

Operation: in conjunction with the GSM control unit item 57501RF-868, allows for door opening by entering the user's PIN. There are no wired connections between the keypad and the GSM control unit, as transmission occurs wirelessly.

Art.	Description	€
57515RF-868	**RADIO REPEATER MODULE** Dark gray ABS box body, dimensions: mm 66 x 50 x 20 Power supply: 12 Vac/dc - 24 Vdc Bicolor red/green LED for radio connection display RS-485 for connection with the keypad 868 MHz radio connection with GSM terminal item 57501RF-868 Maximum range: 30 meters in an open area **Operation:** radio signal repeater in conjunction with the keypad with code 57512RF-868, 57512SRF-868, 57513RF-868, to be connected via RS-485 cable to the keypad when installed far from the GSM control unit.	177,80
57516RF-868	**RELAY MODULE WITH WIRELESS CONNECTION** White ABS box body, dimensions: mm 66 x 50 x 20 Power supply: 12 Vac/dc - 24 Vdc Bicolor red/green LED for operational status display Relay output C./N.A./N.C. (12 V / 2 A max) 868 MHz radio connection with GSM terminal item 57501RF-868 Maximum range: 30 meters in an open area Setting of 16 addresses with internal dip switches Relay activation via App or SMS **Operation:** the relay module is remotely activated by the GSM control unit item 57501RF-868, allowing for home automation management. Through the doora App, functions such as door opening can be activated remotely. Dedicated to use with items 5156218-66, 57512RF-868, 57313RF-868, it allows the management of up to 16 additional keypads. There are no wired connections between the module and the GSM control unit, as transmission occurs wirelessly.	177,80
57517	**ADDITIONAL EXTERNAL GSM ANTENNA** Height: 78 mm Antenna cable length: 2.5 m. Base with adhesive attachment **Application:** additional antenna to be paired with items 57501 and 57501RF-868 in cases where the control unit is installed in a position where it does not receive sufficient GSM signal.	59,30
00661A	**TWISTED PAIR CABLE** Shielded twisted pair cable with two pairs of wires for binary data transmissions. **Application:** for connecting devices on the Doora serial line.	8,30
57518	**GSM / UMTS MODEM** Blue ABS box body Dimensions: mm 80 x 70 x 30 Mounting system: wall-mounted or on DIN rail Operating frequencies: GSM, GPRS, and UMTS Power supply: 6 - 21 Vdc / 2A peak - 250 mA in standby (supplied with power adapter) Interface: RS232 serial port and USB 2.0 SIM card slot SMA female antenna connector. Supplied with antenna with a cable length of 2.5 m. Supplied with USB cable **Operation:** GSM modem for connecting to a PC for managing the Doora system through software application.	498,00

APPLICATION EXAMPLES
Items 57501RF and 57513RF

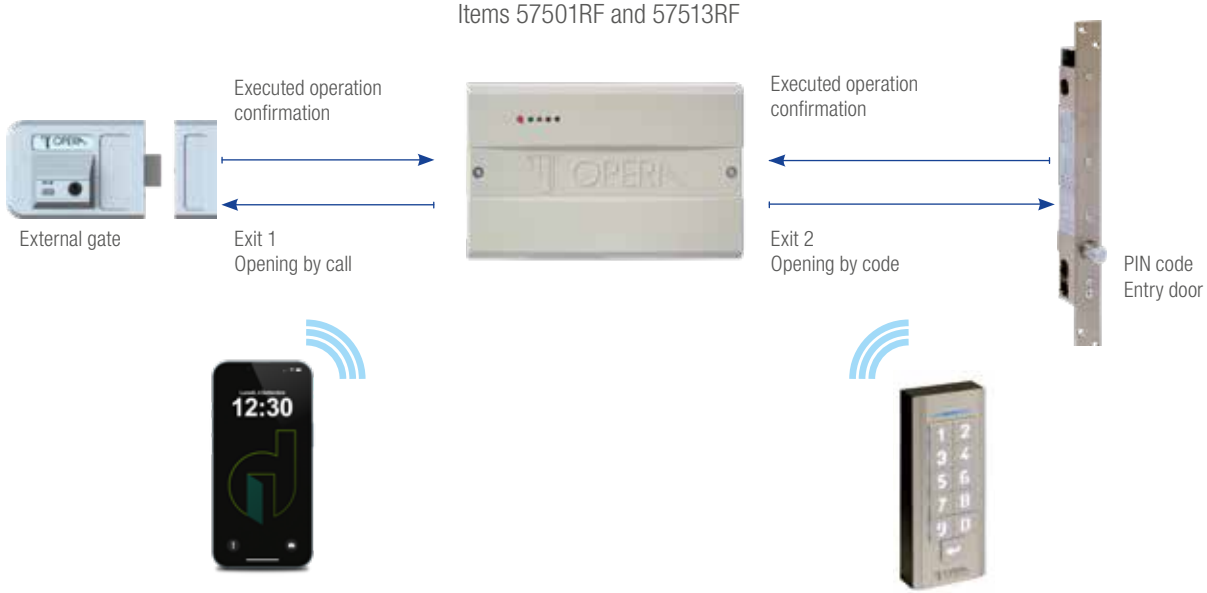

APPLICATION EXAMPLES
Items code 57501RF and 57513RF with RADIO MODULES

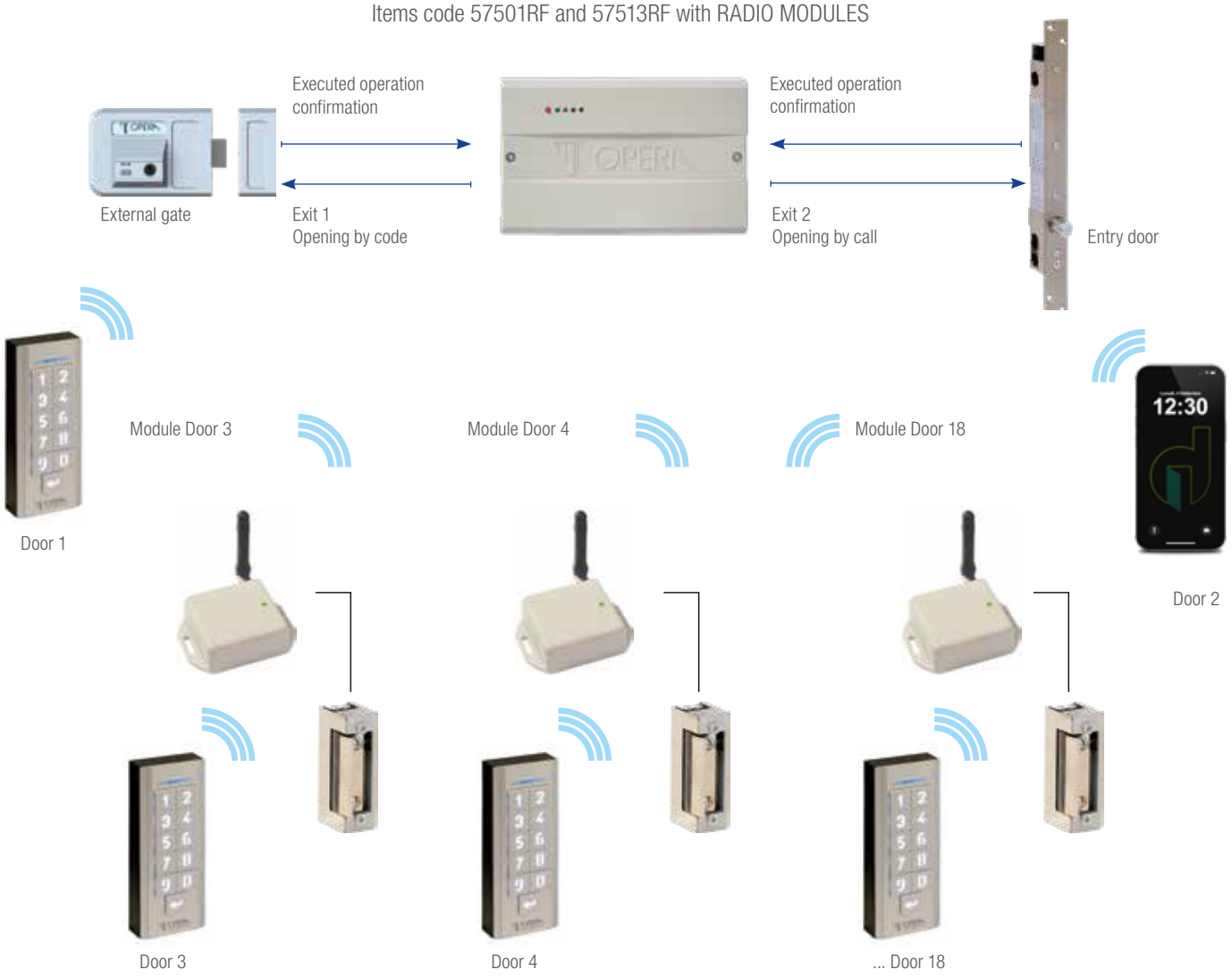

Art.	Description	€
57522	**DOORA SOFTWARE** Application software for the doora system management by local PC through USB door or remotely through GSM modem item code 57518. Operative system Microsoft Windows 7.1 and those following Protection by password Administrator creation Door opener creation/ accommodation facility Introduction, Modification, Deleting of single users User introduction with: - Name - Phone number - Date and time of arrival and departure - Doors selection to authorize by call or Pin code - Automatic or manual PIN code creation - Unlimited users openings (for example for maintenance) - Availability by date - Configuration and data base storage on DropBox cloud	237,10

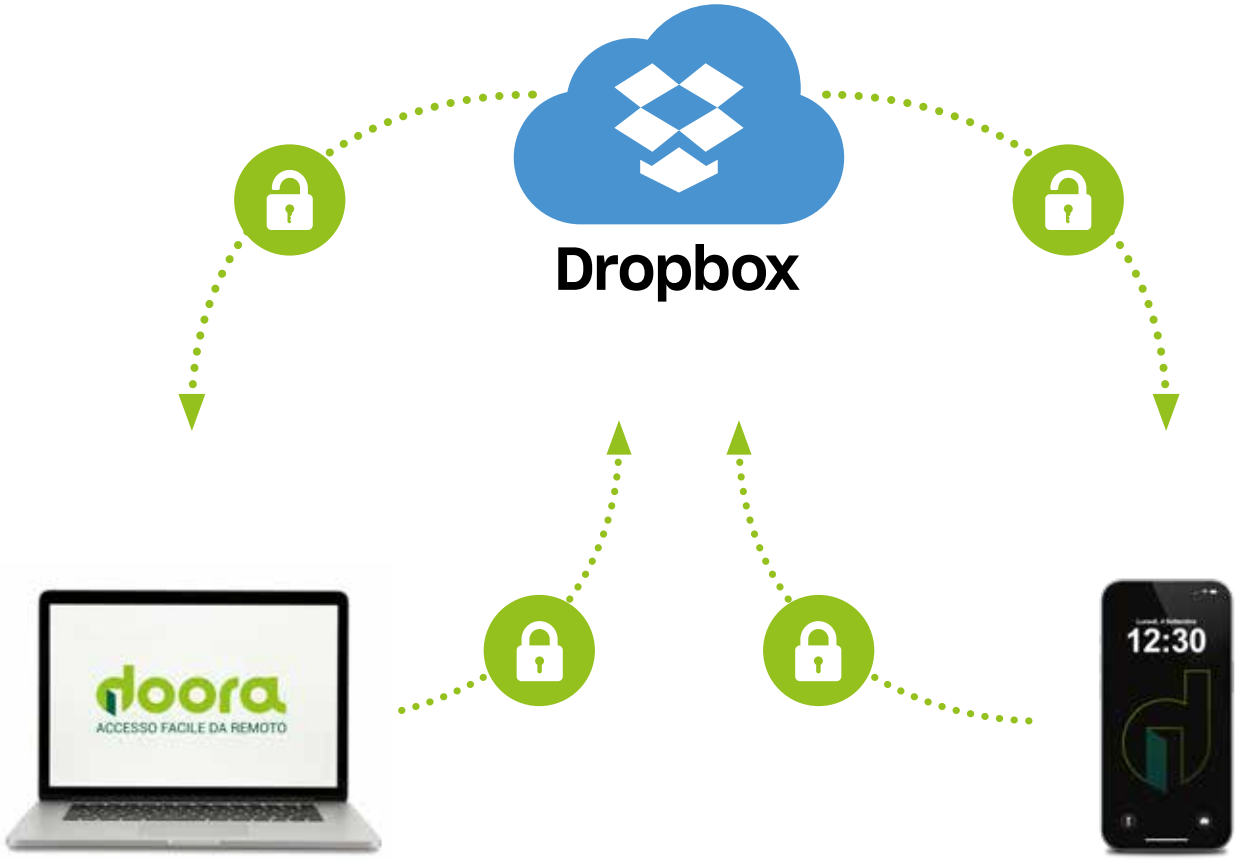

Art.	Description

DOORA APP

App for the doora system management, remotely by handphone
Operative system Apple iOs and Android
Protection by password
Date base creation
Administrator creation
Door opening/accommodation facility creation
Introduction, Modification, Deleting of single users
User introduction with:
- Name
- Date and time of arrival and departure
- Doors selection to authorize by call or Pin code
- Automatic or manual PIN code creation
- Unlimited users openings or xxxxxx (for example for maintenance)
- Availability by date
- Configuration and data base storage on DropBox cloud

Download App
Doora 57501

Download on the App Store

GET IT ON Google Play

Art.	Description	€

NEW

ENERGY SAVING MANAGEMENT UNIT

ABS box dimensions: mm 111 x 72 x 29
Power supply: 12-24 Vdc / 12-18 Vac
Current absorbed: 100 mA max
Real-time clock for battery-backed date and time maintenance
Power relay output for current enablement
868 MHz radio circuit
Number of relay outputs C./N.A./N.C (1A at 30 Vdc):
- User room enablement input
- Enable/disable air conditioning system contact

Number of Open Collector Outputs (100 mA max 60 Vdc):
- Malaise alarm output
- "Low battery" warning for radio sensors
- "Extended door opening" output

Number of inputs for wired sensors and/or auxiliary contacts:
- Malaise alarm activation (e.g., bathroom pull cord)
- Magnetic door status sensor (N.C when the door is closed)
- Magnetic window status sensor (N.C when the window is closed)
- Presence sensor (N.C contact at rest)

In the radio version, up to 16 devices per channel can be associated.
Channel 1: Radio magnetic sensor Art. 57532ARF for "door status"
Channel 2: Radio magnetic sensor Art. 57532ARF for "window status"
Channel 3: Radio sensor Art. 57533ARF and/or 57534ARF for "person presence"

57530A	Version with wired connection	**143,50**
57530ARF	Version with 868 MHz radio connection	**239,20**

Operation: A unit that allows automatic recognition of the presence of people inside the apartment for the consequent activation/deactivation of electrical power on specific devices (e.g., lights and air conditioner). It can also be installed independently of the Doora system (e.g., in facilities managed with keys or other systems).

WIRELESS MAGNETIC SENSOR

Dimensions: 135 x 35 x 34 mm
Detection: Reed contact
Power supply: AA lithium battery, 3.6 V, 2,200 mAh (included)
Radio frequency: 868 MHz
Consumption: 12 µA
Self-learning storage: present
Red LED for alarm indication
Double event transmission (DTE): present
Radio range: up to 200 m in open air
Transmission type: alarm, tampering, battery status
Operating Temperature: -5 ÷ +40 °C

57532ARF	Brown color	**99,80**
57532ABRF	White color	**99,80**

Operation: Magnetic contact for indoor opening protection of doors and windows. The transmitter module, housed in a plastic container, has an anti-opening microswitch and a button for memorization. Can be paired with the radio control unit item 57530ARF.

Art.	Description	€

WIRELESS PRESENCE DETECTOR

Detection: Dual PIR + 10.525 GHz microwave sensor
Dimensions: 71 x 102 x 56 mm
Power supply: 3.6 V lithium battery, 2,200 mAh (included)
Standby consumption: 12 µA (during detection: 25 mA)
Horizontal coverage: 90°
Detection range: 12 meters
Radio range: up to 200 meters in open air
Radio frequency: 868 MHz
Transmission type: alarm, tampering, battery status
MW sensitivity: adjustable via trimmer
Operating temperature: +5 °C ÷ +40 °C

57533	Wired version	**71,60**
57533ARF	868 MHz radio version	**95,40**

Operation: Indoor dual-technology radio presence detector, microwave plus infrared. Equipped with a joint for wall or ceiling mounting with metal locking. Protected against tampering.

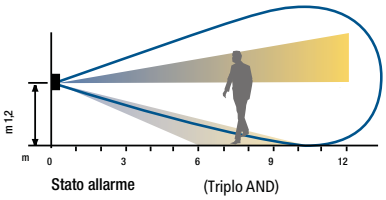

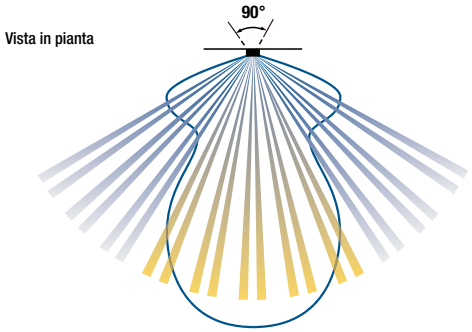

WIRELESS PRESENCE DETECTOR

Detection: Dual PIR + 10.525 GHz microwave sensor
Dimensions: ø 129 x 43 mm
Power supply: 3.6 V lithium battery, 2,200 mAh (included)
Standby consumption: 12 µA (during detection: 25 mA)
Detection area: elliptical
Detection range: 12 m
Radio range: up to 200 m in open air
Radio frequency: 868 MHz
Transmission type: alarm, tampering, battery status
MW sensitivity: adjustable via trimmer
Operating temperature: +5 °C ÷ +40 °C

57534	Wired version	**71,60**
57534ARF	868 MHz radio version	**95,40**

Operation: Indoor ceiling-mounted wireless presence detector. Composed of a PIR and a 10,525 GHz planar antenna microwave. Coverage range of 11.4 m when installed at a height of 4 m; decreasing the mounting height reduces the coverage axis. Can be paired with the universal 8-channel radio receiver item 57531RF. Protected against tampering.

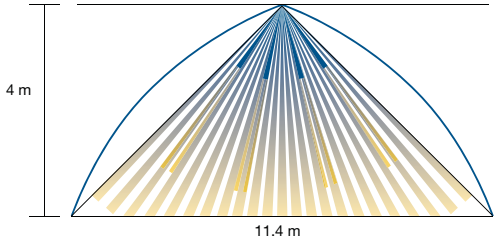

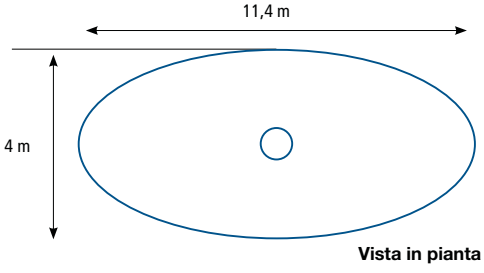

APPLICATION EXAMPLES

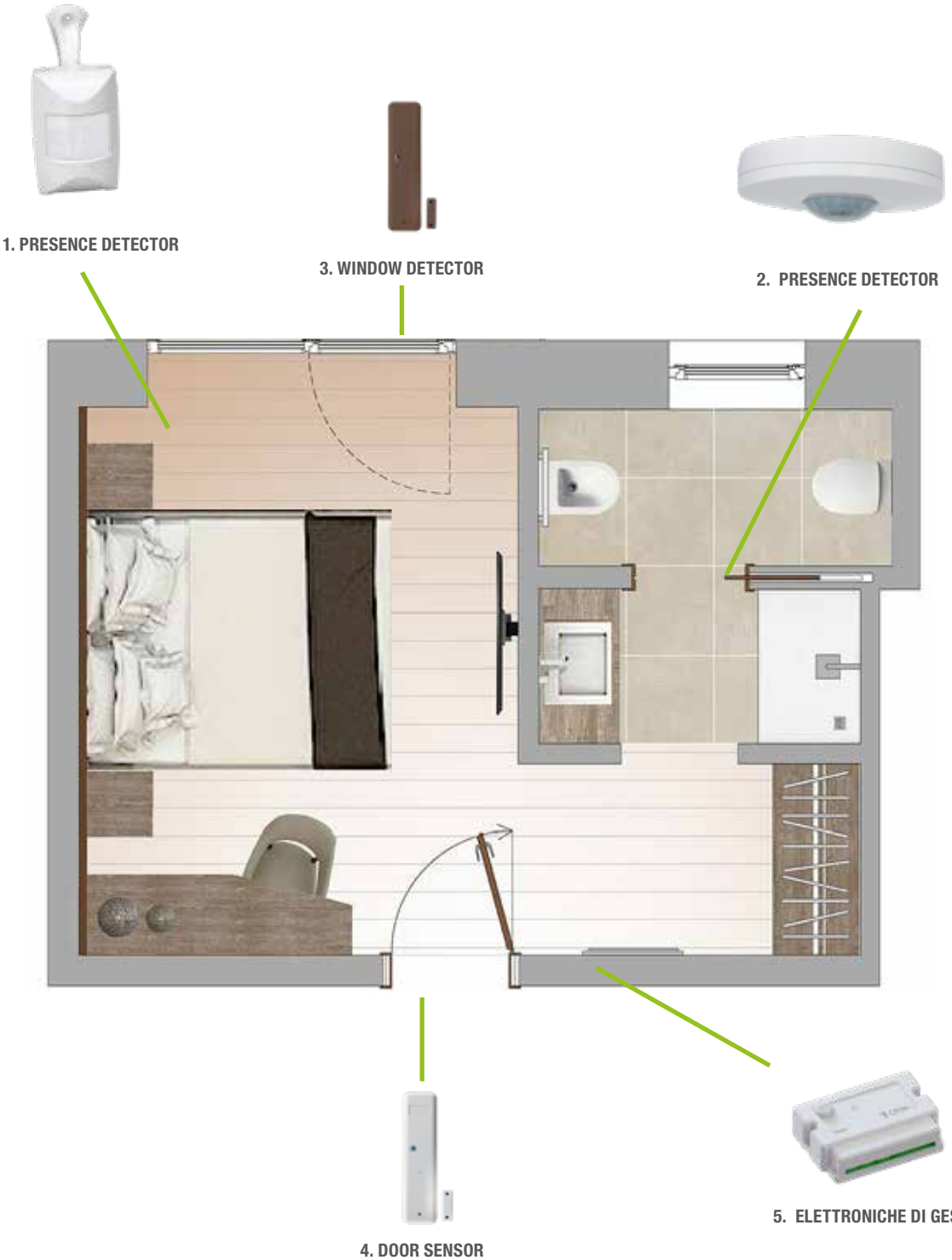

LEGENDA

1 Room volumetric detector
2 Bathroom volumetric detector
3 Window magnetic detector (it deactivates air conditioning)
4 Activation button (optional)
5 Entry door magnetic detector
6 Control board

WATCH THE VIDEO

Art.	Description	€

CARD READER FOR POWER ACTIVATION

Insertion reader in black ABS, dimensions: 66 x 50 x 44 mm
Front film in silver polycarbonate
Reader for 3-module flush-mounted box (specify the flush-mounted civil series used) - Supplied without front plate
Power supply: 24 Vdc from power supply item 05330BD
Double changeover relay internally switchable at 5 A
Flashing red LED for reader indication, steady-on LED for card inserted indication

55512	Dimensional card recognition reader	**160,10**
55512MF	RFID card recognition reader with Mifare technology	**170,00**

Use: Reader for the activation of electrical energy through the insertion of a card

RFID CARD

RFID cards encoded with dual technology (125 KHz and Mifare)
To be paired with card readers 55512MF
Dimensions: 86 x 54 x 0.8 mm

56616MF	Plain (No print)	**6,50**
56616MFSLA	Customer's quad-color screen printing on one side	**8,70**
56616MFSLB	Customer's quad-color screen printing on both sides	**10,40**

05330BD — **153,90**

SWITCHING POWER SUPPLY

ABS box for DIN rail mounting
Dimensions: 130 x 99 x 38 mm
Stabilized switching power supply
Input: 230 Vac
Output: 24 Vdc / 1 A
Protection against overloads and short circuits

READER WITH COVER PLATE

PEOPLE COUNTER

- WIRE FREE ADVANCED SYSTEM TO CALCULATE STAFF TRANSIT
- BATTERY POWER SUPPLY
- STAND ALONE FONCTIONNING
- WIFI TRANSMISSIONS TO THE HUBS
- HUB WITH ETHERNET CONNECTION

WIRELESS PEOPLE COUNTER
WPC-M

PEOPLE COUNTER

www.opera-italy.com

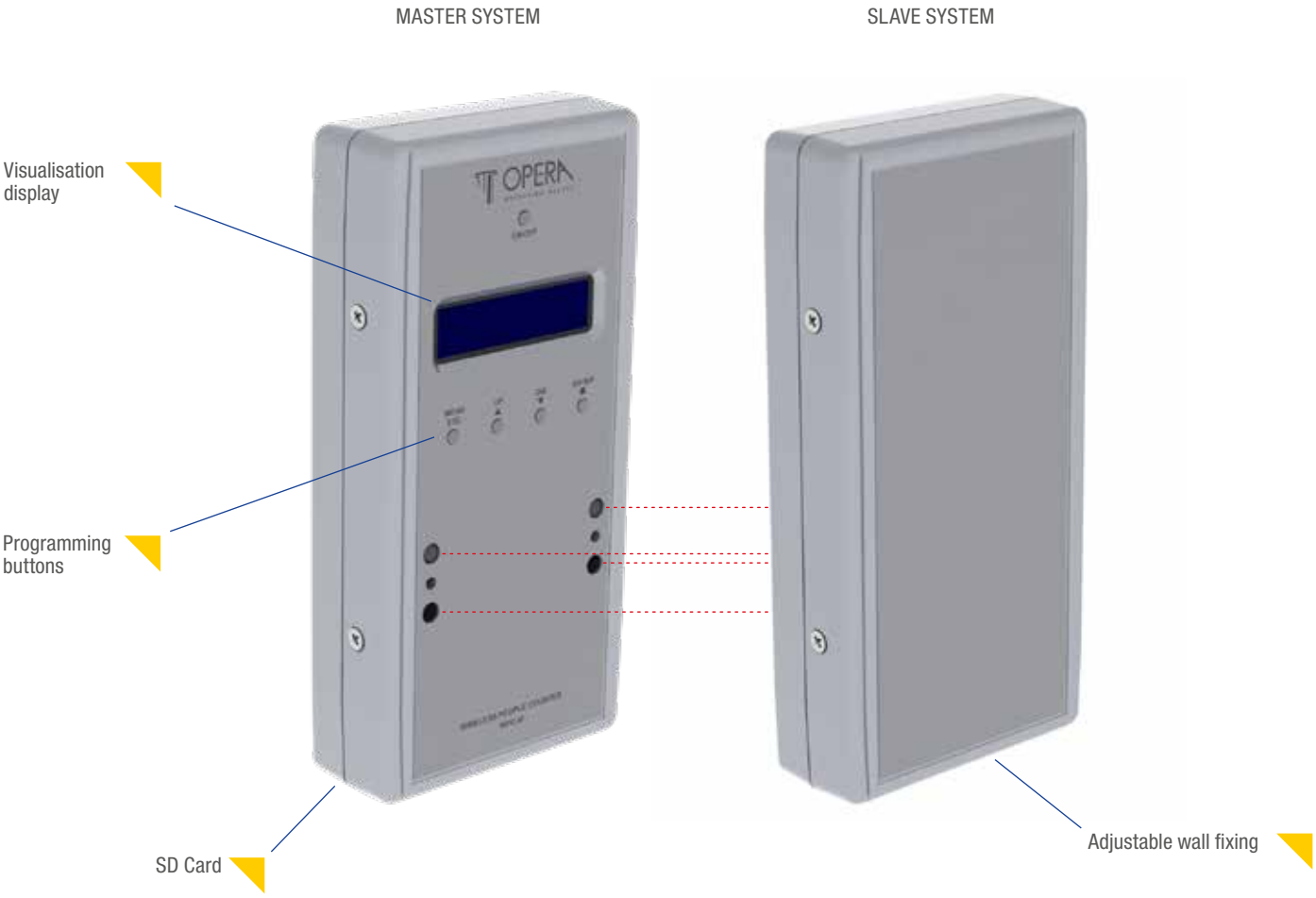

PLUS

- Reduced dimensions
- Codified infrared system with battery power supply
- Uni or bidirectional transit counter
- Wire free easy installation
- Stand Alone version with data download on SD card
- Radiofrequency version for data download on the Hub
- Data Hub with Ethernet connection for PC access

PLUS

- Wi-fi fonctionning
- Bidirectional entry and exit counter
- Wi-fi data download and query by the Ethernet network

WATCH THE VIDEO

PEOPLE COUNTER

www.opera-italy.com

Art.	Description	€

PEOPLE COUNTER

Electronics in ABS enclosures
Dimensions: mm 165 x 80 x 35
Rated voltage: 3.6 V - power draw < 3 mW
Power supply: 3 x 3.6 V AA size Lithium thionyl chloride non rechargeable batteries. Operation over 1 year 59000
Protection circuit against incorrect battery installation
Version without batteries: 9 Vac/12 Vdc from inner terminals
Front panel with LCD display 2 x 16 characters: mm 55 x 16
Programming buttons from Master circuit
USB port for firmware upgrades
SD card slot for data storage and transfer to PC when used in stand-alone version
Configurable addressing from 1 to 10 when used with the concentrator connected to the PC
Data transfer to concentrator via 433.125 MHz radio frequency module
Real time clock/date
Data storage on non-volatile memory for 12 months period, 24 hours per day with details for each hour
Photoelectric barrier in two-way or one-way version
Controllable doors:
- 1 for the two-way version with maximum distance between the projector and receiver of 5 or 8 m (selectable)
- 1 for the one-way version with maximum door width of 2.5 m with reflector

- Display information:
- Date and time
- Total entered
- Total exited
- Present in day
- Average presence in day
- Maximum presence in day
- Total presence since a pre-set date

IProgrammable settings for:
Date and time
Activation of “beep” function for each passage
Programming access password
Configurable door direction
Activation/deactivation reset time
Set maximum number of presences
Reset data in memory
Display terminal number
Photocell alignment test
Restore factory settings
Multilanguage support (Italian/English)
Stand-alone version

BI-DIRECTIONAL VERSION

ONE WAY VERSION

59001	One-way version	**398,40**
59002	two-way version	**597,50**
	RF version for use with data router	
59001RF	One-way version	**486,10**
59002RF	two-way version	**685,30**

Use: monitoring the number of people within a room (public offices, exhibitions, museums, conference halls, supermarkets, etc.)

Art.	Description	€
05914	**WI-FI DATA ROUTER** Box in black ABS Dimensions (mm): 92 x 66 x 27 Power supply: 5Vdc from power supply on Usb connector (supplied) Nominal tension: 3,3Vdc Power consumption: < 30mW RJ45 plug-in for Ethernet connection Ethernet controller IEEE 802.3 compatible Transmission to Mini Counter people by radiofrequency 433 Mhz 99 channel Set up and configuration by Micro USB port Web server housed in to view data of Mini counter via Lan Network. Static IP address is required **Use:** Data centre for Wireless Counter people	373,50
05916	**SD MEMORY CARD** Memory card for storage of data	24,90
05917	**BATTERIES 3,6 V - AA** 3 batteries needed for people counter	20,20

APPLICATION EXAMPLES

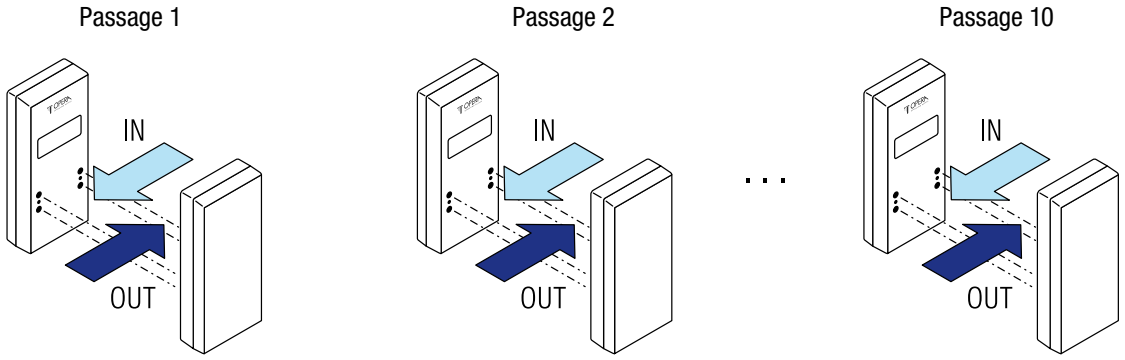

PEOPLE COUNTER

SOFTWARE FOR PEOPLE COUNTER SYSTEM

www.opera-italy.com

Art.	Description	€
05912WEB	**VIEWING/DOWNLOADER SOFTWARE** Software supplied on auto-installing CD-Rom for connection of the Mini Counter People system with a PC for viewing from a local station via RS-232 or remotely via converter Art. 05913 of the current status of presences inside the monitored facility. On the monitor the following is shown: - The customer's name on the header (i.e.: Museum of Fine Arts) - Number of people who have entered - Number of people who have exited - Number of people present - 3 presence thresholds with different colouring on the screen and viewing in red of exceeded pre-established maximum thresholds The program allows: - Downloading of the data with reference to the presences in a period of time, setting a start date and an end date - Downloading of the data setting a time interval - Memorising the status of the presences in a determined moment **Use:** this software allows downloading of the data stored in the memory of the people counter, placing it on a PC in an Excel file. The data is shown subdivided into Entrances, Exits and Presences in one hour intervals. This way the data is easily managed for preparation of statistics with reference to the presences within a predetermined period of time	474,20

Schermate visualizzatori

Analisi grafica giornaliera

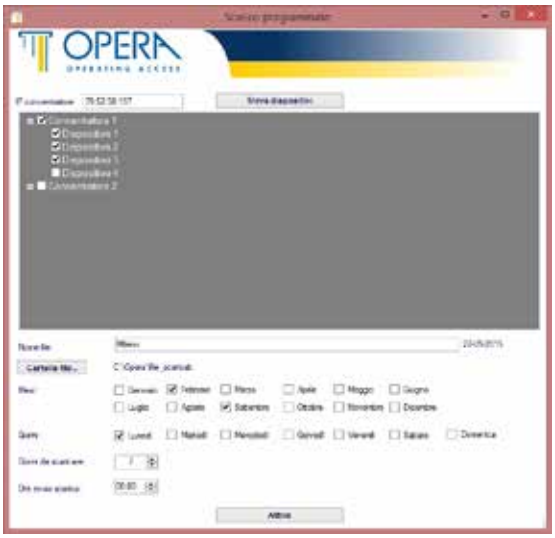

Scarico programmato

Art.	Description	€
59013	**HANDHELD PEOPLE COUNTER** Container in black ABS Dimensions (mm): 105 x 58 x 18 2 x 16 character LCD display Operating voltage: 3 Vdc via 2 AAA type batteries – 1.5 V Front label in polycarbonate with 4 buttons In / Out / Set / OK Monitoring of bidirectional or mono-directional passages Memorisation and upkeep of 30 days or 790 hours on non volatile memory Battery status indicated on display View on display: - Date and time - Total entrances per single hour - Total exits per single hour - Total presences per single hour Settings programmable for: Date and time People Counter Reset “Beep” function for every passing Zero out data in memory Automatic shut down **Use:** monitoring of the number of people present in a room (public offices, exhibits, museums, conference rooms, supermarkets, etc...)	308,30

	Art.	Description	€
		Common characteristics: High security 9 pin key cylinder. Body in nickel plated brass with tamper insert and pins in hardened anti-drilling steel. Built in accordance with EN1303 standards, grade 6 durability, grade 5 security. Number of combinations: more than 300,000. Flat key in nickel plated brass, reversible. Supplied with certificate of ownership	
		DOUBLE FLAT KEY SECURITY CYLINDER European profile cylinder body - Nickel plated finish Supplied with 3 keys	
	08010 06	Dimension 60 mm. (30 + 30)	96,00
	08010 07	Dimension 65 mm. (30 + 35)	100,80
	08010 08	Dimension 70 mm. (35 + 35)	100,80
	08010 09	Dimension 70 mm. (40 + 30)	106,70
	08010 10	Dimension 80 mm. (40 + 40)	107,90
	08010 11	Dimension 80 mm. (45 + 35)	109,10
	08010 12	Dimension 85 mm. (45 + 40)	112,60
	08010 13	Dimension 90 mm. (45 + 45)	122,10
	08010 14	Dimension 90 mm. (50 + 40)	123,30
	08010 15	Dimension 90 mm. (55 + 35)	123,30
	08010 19	Dimension 100 mm. (50 + 50)	131,60
	08010 20	Dimension 100 mm. (60 + 40)	131,60
	08010 21	Dimension 100 mm. (55 + 45)	131,60
	08010 22	Dimension 100 mm. (70 + 30)	131,60
		HALF FLAT KEY SECURITY CYLINDER European profile cylinder body. Matt nickel plated finish Supplied with 3 nickel silver keys	
	08030 01	Dimensions 40mm. (30 + 10)	73,50
	08030 04	Dimension 45 mm. (35 + 10)	73,50
	08030 05	Dimension 50 mm. (40 + 10)	74,70
	08030 06	Dimension 60 mm (50 + 10)	74,70
	08030 08	Dimension 70 mm. (60 + 10)	75,90
	08030 11	Dimension 80 mm. (70 + 10)	75,90
	08030 13	Dimension 90 mm. (80 + 10)	77,10
	08030 20	Dimension 100 mm. (90 + 10)	80,60
	08040 00	**KEY SWITCH** Key switch with N.O. contact 90° rotation with automatic return of the key - Supplied with 3 keys	353,60
		EXTRA KEY	
	01808	Additional Key for Shaped Cylinders	39,10
	01808K	Additional KA key	39,10
	KA	**UNIQUE ENCRYPTION PER CYLINDER (KA)** Supplement for unique encryption per formed cylinder	29,60
		TAMPER DEFENDER Matt chromium plated body in hardened steel Rotor in hardened steel Dimensions (mm): 70 x 30 x 8 Fixing without through bolt holes with burglar block with cylinder inserted Usable with cylinders which protrude up to 4 mm. For greater protrusions special 1 mm. shims can be used up to the desired protrusion. **Use:** dtamper defender for security cylinders. Can be used with all cylinders mounted on electromechanical locks and solenoid locks	
	02250	Defender	49,80
	02251	1 mm. shims in steel	2,30

GENERAL SALES CONDITIONS

These general sales conditions, save any modifications or variations agreed upon in writing, govern all sales contracts between us and the purchaser, thus including the contract concluded with the acceptance of the order as well as any future contract related to the supply of our company's products ordered with subsequent and distinct commissions.

Opera Srl sells only to professional customers. The customer, buying Opera products, assures to use it just for purposes related to his professional activity.

Prices:
Price list is in EURO and without taxes.
Prices do not contain freight cost and invoicing cost when due.
All invoices will be raised in EURO

Shipment:
National shipment (Italian territory):

- Net value of order, without taxes, is lower than Eur. 800,00 - Transport is paid til customer's premises, with charge in the invoice of the freight cost. The carrier is selected by Opera. In case the customer wish to use his own carrier or to select another carrier, the transport will be Ex our Work. In this case the freight costs are totally handled by customer/receiver.

- Net value of order, without taxes, is lower than Eur. 50,00 - Transport is paid til customer's premises, with charge in the invoice of the freight cost. The carrier is selected by Opera. - There is an extra charge of Eur. 10,00 for invoicing cost. Payment term is always up front or advanced.

- Net value of order, without taxes, is higher than Eur. 800,00 - Transport is paid til customer's premises, with no charge in the invoice for freight cost. The carrier is selected by Opera. In case the customer wish to use his own carrier or to select another carrier, the transport will be Ex our Work. In this case the freight costs are totally handled by customer/receiver.

International shipment - EEC zone:

- Net value of order, without taxes, is lower than Eur. 1.500,00 - Transport is paid til customer's premises, with charge in the invoice of the freight cost. The carrier is selected by Opera. In case the customer wish to use his own carrier or to select another carrier, the transport will be Ex our Work. In this case the freight costs are totally handled by customer/receiver.

- Net value of order, without taxes, is higher than Eur. 1.500,00 - Transport is paid til customer's premises, with no extra charge in the invoice for freight cost. The carrier is selected by Opera. - In case the customer wish to use his own carrier or to select another carrier, the transport will be Ex our Work. In this case the freight costs are totally handled by customer/receiver.

International shipment - Non EEC zone:

- Net value of order, without taxes, is lower than Eur. 2.000,00 - Transport is paid til customer's premises (Incoterm: CFR), with charge in the invoice of the freight cost. The carrier is selected by Opera. In case the customer wish to use his own carrier or to select another carrier, the transport will be Ex our Work. In this case the freight costs are totally handled by customer/receiver.

- Net value of order, without taxes, is higher than Eur. 2.000,00 - FOB with no extra charge in the invoice for freight cost. The carrier is selected by Opera. - In case the customer wish to use his own carrier or to select another carrier, the transport will be Ex our Work. In this case the freight costs are totally handled by customer/receiver.

Returns for repairing

- Returns are accepted only by Opera direct customers. Should anybody need to return goods for repairing, he has to address his request to the nearest Opera distributor.

- All returns have to be sent, freight costs free, to our main factory in Modena, Italy. The goods have to be correlated with a list of items, sort of problem found, contact name and telephone number.

Definitive return

- Any definitive return must be demanded in writing and authorised by Opera in writing.

- Upon authorisation, Goods for definitive return must be sent according to the instructions received. All documents must refer to the original invoice number.

QUALITY GUARANTEE
OOPERA S.r.l. guarantees the proper operation of its products for 2 years from invoice date. The guarantee, however, under no circumstances may go beyond the replacement free of charge of the piece which is considered to be defective. No other expenses or indemnity may be charged to OPERA S.r.l. The guarantee will be void if the products are tampered with by unauthorised personnel or if used spare parts are not original Opera parts.

CONTROVERSIES
For any controversy, even if it originates with the buyer, jurisdiction will fall to the Court of Modena. The descriptions contained in this catalogue are to be considered indicative. The Company reserves the right to make technical or commercial modifications at any time and without advanced notice..

NOTE

www.opera-italy.com

NOTE

www.opera-italy.com

NOTE

www.opera-italy.com

OPERA®

OPERATING ACCESS

www.opera-italy.com

OPERA S.r.l.
Via Portogallo, 43 - 41122 Modena - ITALY
tel +39 059 451708 | fax +39 059 451697
info@opera-access.it